PD1000 Series user manual

1、Preface

Thank you for choosing the PD1000 Series of high performance, simple inverter. Diagram of operating instructions, is to facilitate the description, maybe slightly different with the product.
Please note that this manual will be handed the hands of end users , and retain for future maintenance, use and if in doubt, we will be happy to serve you.

2、PD1000 series nameplate description

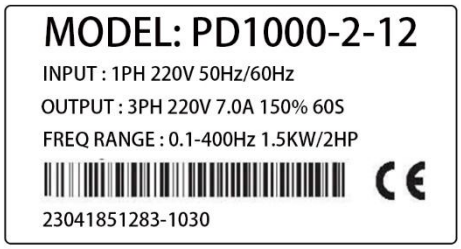

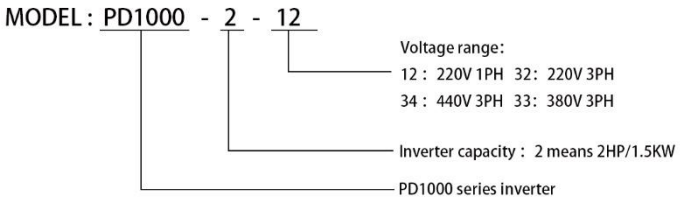

3、PD1000 series dimensions

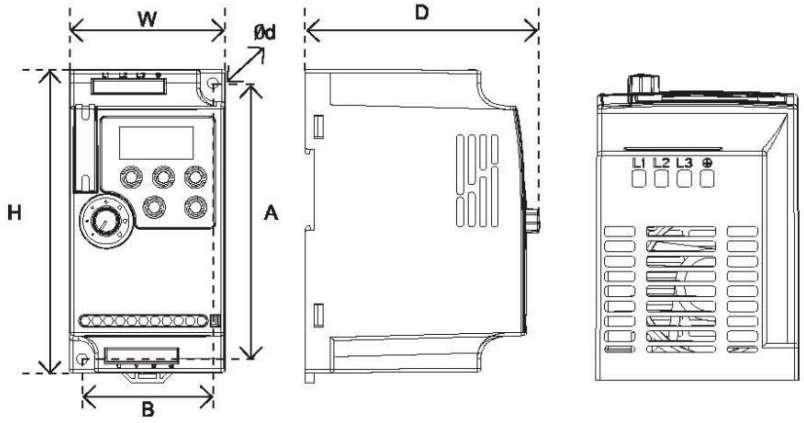

Note: Support for standard 35mm rail mounting(below 5.5kW) Unit : mm

PD1000 model	W	H	D	A	B	Φd
PD1000-0.5-12 ~ PD1000-2-12	68	132	102	120	57	4.5
PD1000-3-12	72	142	112.2	130	61	4.5
PD1000-0.5-33 ~ PD1000-3-33						
PD1000-5-33 ~ PD1000-7-33	85	180	116	167	72	5.5

PD1000-10-33 ~ PD1000-15-33	106	240	153	230	96	4.5
PD1000-20-33 ~ PD1000-30-33	151	332	165.5	318	137	7
PD1000-40-33 ~ PD1000-50-33	217	400	201	385	202	7
PD1000-60-33 ~ PD1000-75-33	300	470	240	455	200	9
PD1000-100-33 ~ PD1000-150-33	275	630	310	612	200	9
PD1000-180-33 ~ PD1000-220-33	400	715	310	695	320	11

4、PD1000 series keyboard description

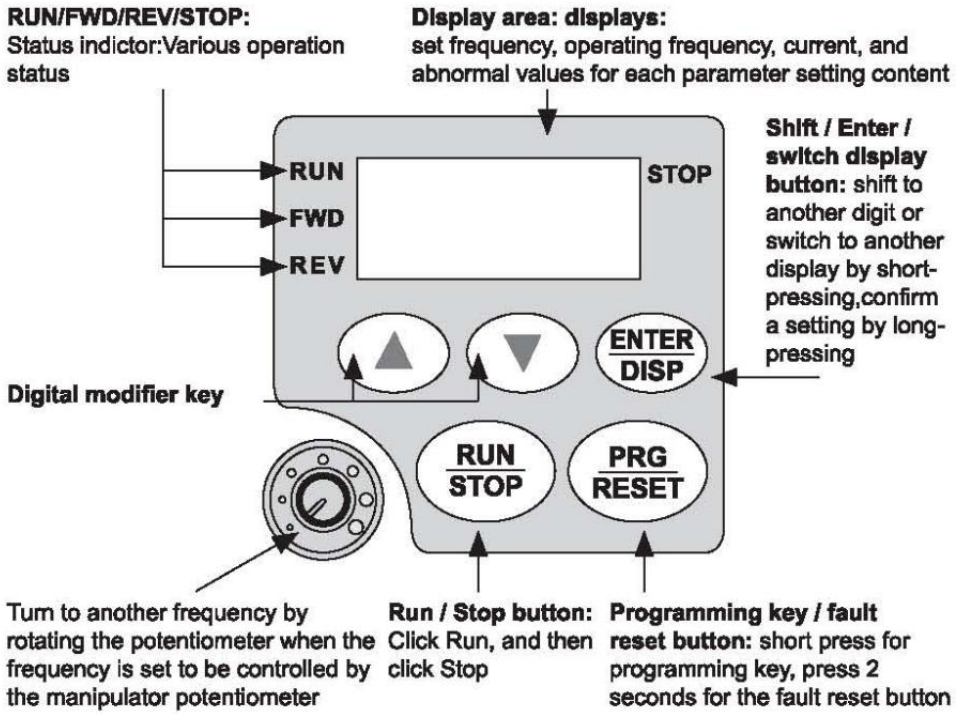

5、Product Specifications

Items		PD1000 series
Power Supply	Rated voltage，frequency	1PH/3PH AC 220V 50/60Hz;3PH AC 380V 50/60Hz
	Voltage range	220V：170-240V；380V：330-440V
Output	Voltage range	220V: 0-220V ; 380V: 0-380V
	Frequency range	0.10—400.00Hz
Control method		V/F control, space vector control.
Indication		Operating status/Alarm definition/interactive guidance; eg, frequency setting, the output frequency/ current, DC bus voltage, the temperature and so on.

Control specifications	Output frequency range	0.10Hz-400.00Hz
	Frequency setting resolution	Digital input: 0.1Hz, analog input: 0.1% of maximum output frequency
	Output frequency accuracy	0.1Hz
	V/F control	Setting V/F curve to satisfy various load requirements.
	Torque control	Auto increase: auto raise torque by loading condition; Manual increase: enable to set 0.0~20.0% of raising torque.
	Multifunctional input terminal	Four multi-function input terminals, realizing functions including fifteen section speed control, program running, four-section acceleration/deceleration speed switch, UP/DOWN function and emergency stop and other functions.
	Multifunctional output terminal	1 multi-function output terminals for displaying of running, zero speed, counter, external abnormity, program operation and other information and warnings.
	Acceleration / deceleration time setting	0~999.9s acceleration / deceleration time can be set individually
Other Functions	PID control	Build-in PID control
	RS485	Standard RS485 communication function-MODBUS
	Frequency setting	Analog input：0-10V，0-20mA can be selected；Digital input：Input using the setting dial of the operation panel or RS485 or UP/DOWN. Note：AVI terminals can be used to select an analog voltage input(0-10V) and analog current input(4-20mAI) through the switch J2.
	Multi-speed	Four multifunction input terminals, 15 section speed can be set
	Automatic voltage regulation	Automatic voltage regulation function can be selected
	Counter	Built-in 2 group of counters
Protection	Overload	150%,60 second (Constant torque)
	Over voltage	Over voltage protection can be set
	Under voltage	Under voltage protection can be set
	Other protections	Output short circuit, over current, and parameter lock and so on.
Environment	Ambient temperature	-10℃-40℃（non-freezing）
	Ambient humidity	Max.95% (non-condensing)
	Altitude	Lower than 1000m

	Vibration	Max. 0.5G
Structure	Cooling mode	Forced air cooling
	Protective structure	IP20
Installation	Mode	Wall-mounted or standard 35MM rail mounting（Below 5.5kw）

6、PD1000 series wiring diagram

Note: When using a single-phase power supply, please access from terminals L1 and L2

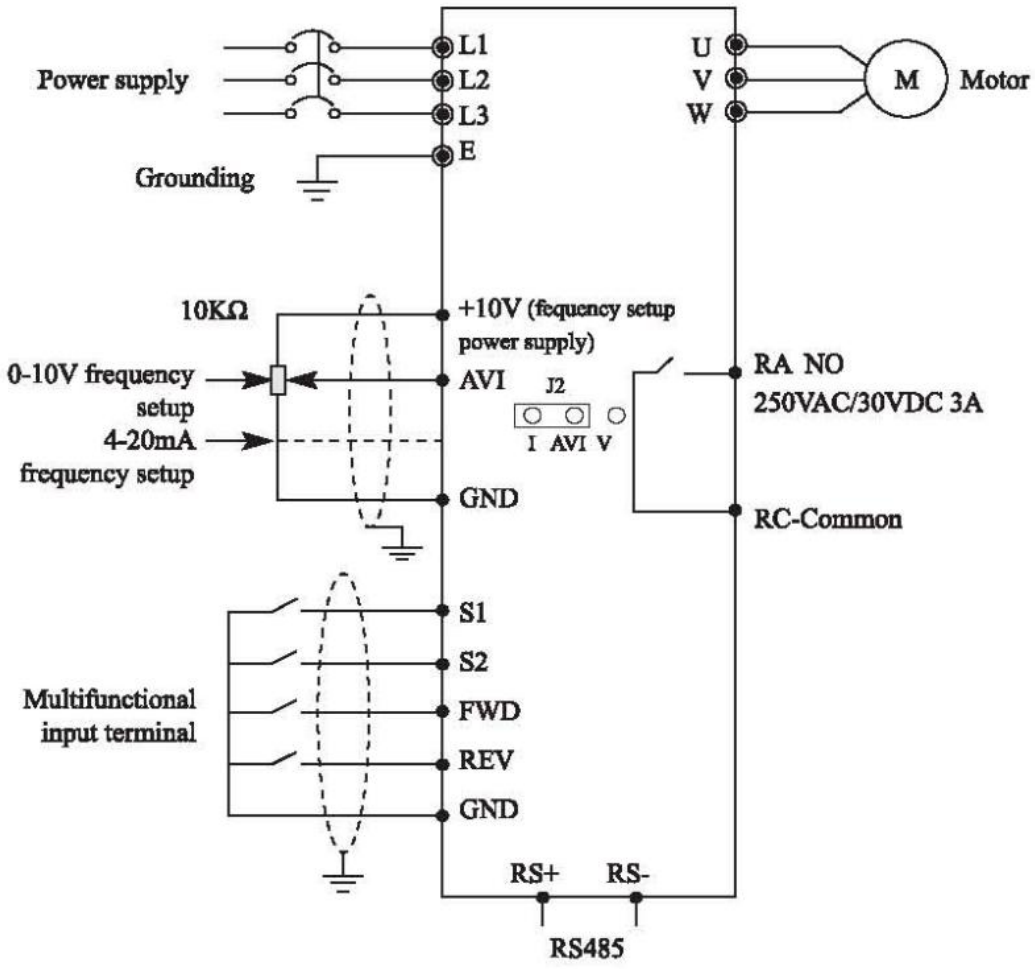

Note: AVI terminals can be used to select an analog voltage input(0-10V) and analog current input (4-20mA) through the switch J2.

FWD	**REV**	**S1**	**S2**	**S3**	**S4**	**10V**	**FIV**	**FIC**	**GND**	**FOV**	**MCM**	**MO1**	**GND**	**RS-**	**RS+**
RA	**RB**	**RC**													

7、PD1000 series parameter list

"☆": The parameter can be modified when the AC drive is in either stop or running state.

"★": The parameter cannot be modified when the AC drive is in the running state.

"●": The parameter is the actually measured value and cannot be modified.

" * ": The parameter is factory parameter and can be set only by the manufacturer.

PRM	Name	Setting Range	Default	Property
Group P0 Monitor functions				
P000	Main display data selection	0: Setting frequency 1: Running frequency 2: Output current 3: Rotate speed 4: Bus voltage 5: Output voltage 6: Reserved 7: Display PID setting feedback 8: PID setting	0	☆
P001	Display the set frequency	Unit:0.1Hz		●
P002	Display the output frequency	Unit:0.1Hz		●
P003	Display the output current	Unit: 0.01A		●
P004	Display the motor speed	Unit: RMP		●
P005	Display the DC bus Voltage value	Unit: 0.1V		●
P007	Display PID	Unit: 0.01		●
P008	Power on time	Accumulate power on time, unit: hour		●

P009	Output voltage	AC drive Output voltage, unit: 1V		●
P010	Alarm record 1	0: No fault 2: Over-current during		●
P011	Alarm record 2	Acceleration 3: Over-current during deceleration		●
P012	Alarm record 3	4: Over-current at constant speed 5: Over-voltage during acceleration		●
P013	Reserved	6: Over-voltage during deceleration 7: Over-voltage at constant speed 8: Resistor overload 9: Undervoltage 10:AC drive overload 11: Motor overload 14: Module overheat 15: External fault 16: Abnormal communication 24: Water supply low pressure 27: Water supply high pressure 28: No water warning 29: Power on time reached 31: PID feedback lost during running		●
P014	The frequency setting in the last alarm	Unit：0.1Hz		●
P015	The output frequency in last alarm	Unit：0.1Hz		●
P016	The output voltage in last alarm	Unit：0.0A		●
P017	The output voltage in last alarm	Unit：0.1V		●
P021	Input terminal	Bito-fwd; Bit1-rev; Bit2-S1; Bit3-S2		●
P022	Output terminal	Bit1:1-Ra Rc action；0-Ra Rc no action		●
P023	AI voltage	0.00-10.00V		●
P027	Fault state	0: No fault 2: Over-current during acceleration 3: Over-current during deceleration 4: Over-current at constant speed 5: Over-voltage during acceleration 6: Over-voltage during deceleration		

		7: Over-voltage at constant speed 8: Resistor overload 9: Undervoltage 10:AC drive overload 11: Motor overload 14: Module overheat 15: External fault 16: Abnormal communication 24: Water supply low pressure 27: Water supply high pressure 28: No water warning 29: Power on time reached 31: PID feedback lost during running		●
P028	Running state	0: Stop 1: Forwarder 2: Reverse		●
Group P1 Basic functions				
P100	Digital frequency setting	0.0-P105	0.0Hz	☆
P101	Main frequency source X selection	0: Digital frequency setting (Can modify the UP/DOWN, power lost memory) 1: Al analog input 2: Remote keypad potentiometer setting mode 3: Local keypad potentiometer setting mode 4: UP/DOWN frequency setting 5: RS485 communication frequency setting 6: Multi-speed reference 7: Simple PLC 8: PID	3	★
P102	Start signal selection	0: Operation panel (FWD/REV/STOP) 1: I/O terminal 2: Communication (RS485)	0	★
P104	Reverse rotation prevention selection	0: Reverse rotation disallowed 1: Reverse rotation allowed	1	☆
P105	Maximum frequency	Minimum operate frequency-999.9Hz	50.0 Hz	☆
P106	Minimum frequency	0.00~maximum frequency	0.0 Hz	☆
P107	Acceleration time 1	0~6000.0s	Changing	☆

P108	Deceleration	0~6000.0s	Changing	☆
P109	V/F maximum voltage	V/F intermediate voltage~500.0V	Changing (380.0 or 220.0)	★
P110	V/F frequency	V/F intermediate frequency ~max. frequency	50.0Hz	★
P111	V/F intermediate Voltage	V/F minimum voltage~ V/F maximum voltage	Changing	★
P112	V/F intermediate frequency	V/F minimum frequency ~ V/F base frequency	2.5 Hz	★
P113	V/F minimum voltage	0~V/F intermediate voltage	Changing	★
P114	V/F minimum frequency	0~V/F intermediate voltage	1.2 Hz	★
P115	Carrier frequency	1.0K-15.0K	Changing	☆
P116	Reserved	Reserved		
P117	Initialization of parameters	8: Initialization of factory Setting	0	★
P118	Parameter lock	0: Unlock parameters 1: Lock up parameters	0	★
P119	Rotation direction	0: Same direction 1: Reverse direction	0	☆
P120	Auxiliary frequency source Y selection	0: Digital frequency setting (Can modify the UP/DOWN, power lost memory) 1: Al analog input 2: Remote keypad potentiometer setting mode 3: Local keypad potentiometer setting mode 4: UP/DOWN frequency setting 5:RS485 communication frequency setting 6: Multi -speed reference 7: Simple PLC 8: PID	0	★
P121	Frequency source selection	Unit's digit : Frequency source selection 0: Main frequency source X 1:X and Y operation (operation relationship determined by ten's digit) 2: Switchover between X and Y 3: Switchover between X and "X and Y	0	☆

		operation" 4: Switchover between Y and "X and Y operation" Ten's digit (X and Y operation) 0:X+Y 1:X-Y 2: Both the maximum 3: Both the minimum		
P122	Auxiliary frequency source Y selection	0: Relative to the maximum frequency 1: Relative to the frequency source X	0	☆
P123	Auxiliary frequency source Y range	0%-150%	100%	☆
P124	Frequency offset of auxiliary frequency source for X and Y operation	0.0Hz~Maximum frequency P1.05	0.0Hz	☆
P125	Base frequency for UP/DOWN modification during running	0: Running frequency 1: Set frequency	1	★
P126	Upper limit frequency	Frequency lower limit P1.06~Maximum frequency P1.05	50.0Hz	☆
P127	Acceleration/ deceleration time base frequency	0: Maximum frequency 1: Set frequency 2:100Hz	0	★
Group P2 Basic functions				
P200	Start mode selection	0: Regular start	0	☆
P201	Stop mode selection	0: deceleration to a stop 1: coast to stop	0	☆
P202	Starting frequency	0.0~50.00Hz	0.5Hz	☆
P203	Stopping frequency	0.0~50.00Hz	0.5Hz	☆
P204	Startup DC braking voltage	0~7.0% rated motor voltage	0.0%	★
P205	Startup DC braking operation time(start)	0~100.0s	0.0	☆

P206	Stop DC braking voltage	0~7.0% rated motor voltage	0.0%	☆
P207	Stop DC braking operation time	0~100.0s	0.0	☆
P208	Torque boost	0~20.0%	3.0%	☆
P209	Rated motor voltage	0-500.0V	380.0V	☆
P210	Rated motor current	0-999.9A	Changing	☆
P211	No load current ratio of the speed	0-100%	50%	☆
P212	Rated motor rotation speed	0-6000r/min	1460	☆
P213	Number of motor poles	0-20	4	☆
P214	Rated motor slip	0-10.00Hz	2.50Hz	☆
P215	Rated motor frequency	0-400.00Hz	50.00Hz	☆
P216	Resistance of stator	0-100.00Ω	Changing	☆
P217	Resistance of rotor	0-100.00Ω	Changing	☆
P218	Self inductance of rotor	0-100.00H	Changing	☆
P219	Mutual inductance of rotor	0-100.00H	Changing	☆
Group P3 I/O functions				
P300	Al minimum voltage input	0.00V-P301	0.00V	☆
P301	Al maximum voltage Input	P301-10.00V	10.00V	☆
P302	Al input filter time	0.00-10.00S	0.10S	☆
P310	Frequency of low analog	0-999.9Hz	0.0Hz	☆
P311	Direction of low analog	0/1:Forward/Reverse	0	☆
P312	Frequency of high analog	0~999.9Hz	50.0Hz	☆
P313	Direction of high analog	0/1:Forward/Reverse	0	☆

P315	FWD	0: Invalid 1: Jog 2: Jog Forward 3: Jog reverse 4: Forward /reverse 5: Run 6: Forward 7: Reverse 8: Stop 9: Multi -speed-1 10: Multi -Speed-2 11: Multi -speed-3 12: Multi - speed-4 13: Acceleration/ Deceleration terminal 1 14: Acceleration/Deceleration terminal 2 15: Terminal (UP) 16: Terminal (DOWN) 17: Coast to stop 18: Fault rese 19: PID in running 20: PLC in running 21: Start signal for timer 1 22: Start signal for timer 2 23: Counter pulse signal 24: Counter reset signal 25: Run pause 26: Switchover between frequency source X and Y	6	★
P316	REV		7	★
P317	S1		18	★
P318	S2		9	★
P325	RA,RC	0: Invalid 1: In running 2: Frequency reached 3: Alarm (stop) 4: Zero speed (Valid when stop) 5: Frequency 1 reached 6: Frequency 2 reached 7: Acceleration 8: Deceleration 9: Indication for under voltage 10: Timer 1 reached 11: Timer 2 reached 12: Indication for completion for completion of procedure 13: Indication of procedure	3	☆

		14: PID maximum 15: PID minimum 16: 4-20mA disconnection 17: Motor overload pre-warning 18:AC drive overload pre-warning 27: Counter pulse setting value reached 28: Intermediate pulse setting value reached 29: Water supply by constant voltage “1” tum on “ 0” tum off 30: READY		
P328	S filter time	0.000s-1.000s	0.010s	☆
P329	Terminal command mode	0: Two-line mode 1 1: Two-line mode 2 2: Three-line mode 1 3: Three-line mode 2	0	★
P330	Terminal UP/DOWN rate	0.01Hz/s~99.99Hz/s	1.00Hz/s	☆
P331	DO output terminal valid mode selection	0: Positive logic 1: Negative logic Unit's digit: Reserved Ten's digit: RA-RC	00000	☆
P332	FWD output delay time	0.0s-999.9s	0.0s	☆
P333	REV output delay time	0.0s-999.9s	0.0s	☆
P334	S1 output delay time	0.0s-999.9s	0.0s	☆
P335	X valid mode selection 1	0: High level valid 1: Low level valid Unit's digit: FWD Ten's digit: REV Hundred's digit: S1 Thousand's digit: S2	00000	★
Group P4 Secondary application functions				
P400	Jog frequency setting	0.00-maximum frequency	5.0Hz	☆
P401	Acceleration time2	0-999.9s	10.0s	☆
P402	Deceleration time2	0-999.9s	10.0s	☆

P403	Acceleration time3	0-999.9s	10.0s	☆
P404	Deceleration time3	0-999.9s	10.0s	☆
P405	Acceleration time4 /Jog acceleration time	0-999.9s	10.0s	☆
P406	Deceleration time4 /Jog deceleration time	0-999.9s	10.0s	☆
P407	Designated value of counter	0-9999	100	☆
P408	Intermediate value of counter	0-9999	50	☆
P409	Limitation of acceleration torque	50-200%	150%	☆
P410	Over-current stall suppression gain	0-100%	20%	☆
P411	Over voltage stall enabled	0:invalid 1:valid	1	☆
P412	V/F over-excitation gain	0-100%	10	☆
P413	Over-voltage stall suppression gain	0-200%	50%	☆
P414	Braking action voltage	400V:700.0V 220V:370.0V	Changing	☆
P416	Startup protection	0:Yes 1:No Set P416=0 when connect FWD and GND, after power off, when power on again, AC drive don't work	1	☆
P417	Action selection at instantaneous power failure	0: Invalid 1: Decelerate 2: Decelerate to stop	0	☆
P420	Fault restart times	0-20	0	☆
P421	Time interval of fault auto reset	0.1s-100.0s	1.0s	☆
P423	Over current detection level	0-200%	0.0%	☆
P424	Over current detection time	0-999.9s	10.0s	☆
P425	Reaching frequency	0.00Hz~,maximum frequency	0.0Hz	☆

	1(FDT1)			
P426	Reaching frequency 2 (FDT2)	0.00~maximum frequency	0.0Hz	☆
P427	Timer 1 setting	0.0S~999.9S	10.0S	☆
P428	Timer 2 setting	0.0S~999.9S	20.0S	☆
P430	Frequency detection hysteresis (FDT2)	0.0%~100.0% (FDT1 or FDT2) level	5.0%	☆
P431	Jump frequency 1	0.00Hz~maximum frequency	0.00Hz	☆
P432	Jump frequency 2	0.00Hz~maximum frequency	0.00Hz	☆
P433	Jump frequency hysteresis loop width	0.00Hz~maximum frequency	0.00Hz	☆
Group P5 PLC operation				
P500	Simple PLC retentive selection	Unit's digit: Retentive upon power stop selection 0: No 1: Yes Ten's digit: Retentive upon power failure selection 0: No 1: Yes	00	☆
P501	PLC starting mode	0: if P101=7, PLC valid 1: PLC start		☆
P502	Simple PLC running mode	0: Stop after the AC drive runs one cycle 1: Keep final values after the AC drive runs one cycle 2: Repeat after the AC drive runs one cycle	0	☆
P503	Multi-speed 1	0.00~maximum frequency	20.0 Hz	☆
P504	Multi-speed 2	0.00~maximum frequency	10.0 Hz	☆
P505	Multi-speed 3	0.00~maximum frequency	20.0 Hz	☆
P506	Multi-speed 4	0.00~maximum frequency	25.0 Hz	☆
P507	Multi-speed 5	0.00~maximum frequency	30.0 Hz	☆

P508	multi-speed 6	0.00~maximum frequency	35.0 Hz	☆
P509	Multi-speed 7	0.00-maximum frequency	40.0 Hz	☆
P510	Multi-speed 8	0.00~ maximum frequency	45.0 Hz	☆
P511	Multi-speed 9	0.00~maximum frequency	50.0 Hz	☆
P512	Miti-speed10	0.00~maximum	10.0 Hz	☆
P513	Multi-speed 11	0.00~maximum frequency	10.0 Hz	☆
P514	Multi-speed 12	0.00~maximum frequency	10.0 Hz	☆
P515	Multi-speed 13	0.00~maximum frequency	10.0 Hz	☆
P516	Multi-speed 14	0.00~maximum frequency	10.0 Hz	☆
P517	Multi-speed 15	0.00~maximum frequency	10.0 Hz	☆
P518	PLC Operation time1	0s(h)~9999s(h)	3s(h)	☆
P519	PLC Operation time2	00s(h)~9999s(h)	4s(h)	☆
P520	PLC operation time3	00s(h)~9999s(h)	5s(h)	☆
P521	PLC operation time4	00s(h)~9999s(h)	0s(h)	☆
P522	PLC operation time5	00s(h)~9999s(h)	0s(h)	☆
P523	PLC operation time6	00s(h)-9999s(h)	0s(h)	☆
P524	PLC operation time7	00s(h)~9999s(h)	0s(h)	☆
P525	PLC operation time 8	00s(h)~9999s(h)	0s (h)	☆
P526	PLG operation time9	0s(h)~9999s(h)	0s(h)	☆
P527	PLC operation time10	00s(h)~9999s(h)	0s(h)	☆
P528	PLC operation time11	0s(h)~9999s(h)	0s(h)	☆
P529	PLC operation time12	00s(h)-9999s(h)	0s(h)	☆

P530	PLC operation time13	0s(h)~9999s(h)	0s(h)	☆
P531	PLC operation time14	00s(h)~9999s(h)	0s(h)	☆
P532	PLC operation time15	0s(h)~9999s(h)	0s(h)	☆
P533	PLC operation direction	0~9999s	0	☆
P536	PLC running direction high level	0~6	0	☆
P537	PLC running time unit	0: s 1:h	0	☆
P538	Multi-speed 1 selection	0：P5.03	0	☆
P539	Acceleration/ deceleration time of simple PLC reference 1	0~3	0	☆
0P540	Acceleration/ deceleration time of simple PLC reference 2	0~3	0	☆
P541	Acceleration/ deceleration time of simple PLC reference 3	0~3	0	☆
P542	Acceleration/ deceleration time of simple PLC reference 4	0~3	0	☆
P543	Acceleration/ deceleration time of simple PLC reference 5	0~3	0	☆
P544	Acceleration/ deceleration time of simple PLC reference 6	0~3	0	☆
P545	Acceleration/ deceleration time of simple PLC reference 7	0~3	0	☆

P546	Acceleration/ deceleration time of simple PLC reference 8	0~3	0	☆
P547	Acceleration/ deceleration time of simple PLC reference 9	0~3	0	☆
P548	Acceleration/ deceleration time of simple PLC reference 10	0~3	0	☆
P549	Acceleration/ deceleration time of simple PLC reference 11	0~3	0	☆
P550	Acceleration/ deceleration time of simple PLC reference 12	0~3	0	☆
P551	Acceleration/ deceleration time of simple PLC reference 13	0~3	0	☆
P552	Acceleration/ deceleration time of simple PLC reference 14	0~3	0	☆
P553	Acceleration/ deceleration time of simple PLC reference 15	0~3	0	☆
P554	Swing frequency setting mode	0: Relative to the central frequency 1: Relative to the maximum frequency	0	☆
P555	Swing frequency amplitude	0.0%~100.0%	0.0%	☆
P556	Jump frequency amplitude	0.0%~50.0%	0.0%	☆
P557	Swing frequency cycle	0.1s-999.9s	10.0s	☆
P558	Triangular wave rising time	0.1%~100.0%	50.0%	☆

	coefficient			
Group P6 PID operation				
P600	PID running mode	0: If 101=8, PID enable, otherwise PID disable 1: PID enable 2: PID start by external terminal	0	☆
P601	PID running mode	0: Negative feedback mode 1: Positive feedback mode	0	☆
P602	PID action set point	0: Digital setting (P6.04) 1: Al setting 2~5: Reserved	0	☆
P603	PID feedback selection	0: Al feedback Choosel:4-20mA P3.00=1.00V; P3.01=5.00V) Choose V:0-10V (P3.00=0.00V; P3.01=10.00V)	0	☆
P604	PID value setting	0.0Bar ~ P614	2.50Bar	☆
P605	PID upper limit	P6.06~P614	10.00Bar	☆
P606	PID lower limit	0.0Bar~P6.05	0.00Bar	☆
P607	PID-P	0.0~600.0%	100.0%	☆
P608	PID-I	0.0~10.00S	2.00S	☆
P609	PID-D	0.0~9.9998	0.000S	☆
P610	Forward maximum value of 2 times output	0.00%~100.00%	2.00%	☆
P611	Sleep frequency	0.00~maximum frequency 0 Means sleep function is closed	25.0Hz	☆
P612	Sleep time	0-9999s	10S	☆
P613	Wake-up percent	Target value's 0.0~100.0%	90.0%	☆
P614	Scale	0.00~50.00bar	10.00bar	☆
P615	PID digit of display	1~5	4	☆
P616	PID decimal digits of display	0-4	2	☆

P617	PID upper limit frequency		48.0Hz	☆
P618	PID lower limit frequency		20.0 Hz	☆
P619	PID detection time		20.0S	☆
P620	PID deviation limit		0.1%	☆
P621	PID feedback loss warning mode	D: No warning 1: Warning no stop, warning code"20” 2: Warning stop, fault code"20"	0	☆
P622	PID feedback loss detection value	Range:0-10.00V （If choose 4~20mA, disconnect when less than 2mA, Set P622=2mA*250Q=0.50V)	0.50V	☆
P623	PID feedback loss detection time	0.0s-20.0s	1.0s	☆
P624	Cut-off frequency of PID reverse	0.00-maximum frequency	0.00Hz	☆
P625	PID differential limit	0.00%-99.99%	0.10%	☆
P626	PID setting change time	0.00-99.99s	0.00s	☆
P627	PID feedback filter time	0.00-60.00s	0.00s	☆
P628	PID output filter time	0.00-60.00s	0.00s	☆
P630	PID proportional gain P2	0.0-600.0%	200.0%	☆
P631	PID proportional gain I2	0.0-10.00s	0.50s	☆
P632	PID proportional gain D2	0.0-9.999s	0.000s	☆
P633	PID parameter switchover condition	0: No switch 1: Switch through X 2: Auto switch	0	☆
P634	PID parameter switchover deviation 1	0.0%-PA.20	5.0%	☆
P635	PID parameter switchover deviation 2	PA.19~100.0%	10.0%	☆

P636	PID initial value	0.0%~100.0%	0.0%	☆
P637	PID initial value hold time	0.00~99.99s	0.00s	☆
P639	PID integral time	Unit's digit: integral separated 0: Invalid	00	☆
P640	PID stop operation	0: No PID operation at stop 1: PID operation at stop	0	☆
P641	Pressure detection value when short of water	0.00 bar ~ PA.01 (set as 0.00bar, no detection)	0.50bar	☆
P642	When AC drive display high/low pressure warning. delay P642, high/low pressure fault is auto reset	1) When AC drive display high pressure warning, after pressure return to normal, delay P642, high pressure fault is auto reset 2) When AC drive display low pressure warning, delay P642, low pressure fault is auto reset. if set P642=0, when AC drive display high/low pressure warning, it will not reset, range: 0~9999s	10s	☆
P643	Low pressure warning detection time	Pressure lower than P606 and keep P643 when running, it will stop Display low pressure fault, range: 0~9999S	10S	☆
P644	Short of water warning detection time	0-9999S	100S	☆
P645	Delay time setting of auto running when power on	0：invalid 1：valid	0	☆
P646	First 10 times interval time of short of water auto reset	0-9999S	600S	☆
P647	Interval time of first 10 times short of water pressure auto reset	0-1000mins	60min	☆
P648	Anti-freeze enable	1: Valid 0: Invalid	0	☆

P649	Anti-freeze waiting time while sleeping	0-9999s	900s	☆
P650	Anti-freeze running time while sleeping	0-9999s	30s	☆
P651	Anti-freeze running frequency while sleeping	0-50.0Hz	15.0Hz	☆
P652	Sleep operate level : operate when frequency<P652/s	0-10.0HZ	0.5HZ	☆
P653	Sleep operate level pressure allowed of frequency reduction	0.0-10.0%	0.60%	☆
P654	Sleep operate level Frequency reduction per second	0-10.0HZ	0.3HZ	☆
P655	Sleep operate level ：times of frequency reduction	0-1000	10times	☆
P656	Sleep operate level frequency>P6.56， no operate	0-maximum P1.05	42.0HZ	☆
P657	PID sample time	0-1000ms	4ms	☆
Group P7 RS-485 communication				
P700	Baud rate	0:4800bps 1:9600bps	1 6005	☆
P701	Data format	0: No check (8-N-1) for ASC 1: Even parity check 8-E-1) for ASC 2: Odd Parity check (8-0-1) for ASC 3: No check (8-N-1) for RTU 4: Even parity check (8-E-1) far RTU 5: Odd Parity check (8-O-1) for RTU	3	☆
P702	Local address	1~247,0: Broadcast address	1	☆

P703	Communication error processing	0: No warning 1: Warning, display Co 2: Display Co and stop	0	☆
Group P8 Advanced application				
P800	User password	0：Locked 1: Unlocked	1	☆
P802	Model selection	0: G type 1:P type	Changing	☆
P803	Over-Voltage protection level setting	400V (220V level) 810V (380V level)	Changing	☆
P804	Under-voltage protection level setting	400V（220v level） 810V（380v level）	Changing	☆
P805	Temperature alarm value		Changing	☆
P812	Digital setting frequency stop memory selection	0：No memory 1：Memory	0	☆
P814	Motor overload coefficient	0.20-10.00	1.00	☆
P815	PWM switch frequency	0.0-100.0HZ	12.0HZ	☆
P816	Motor overload protection selection	0：Prohibit 1：Permit	0	☆

8、Inverter fault

Fault name	Operate panel display	Fault No.
Over current during acceleration	0C1	2
Over current during deceleration	0C2	3
Over current during constant speed	OC3	4
Over voltage during acceleration	OU1	5
Over voltage during deceleration	OU2	6
Over voltage during constant speed	OU3	7
Resistor overload (Continue entering into under voltage state)	POF	8
Under voltage	LU	9
AC drive overload	OL2	10

Motor overload	OL1	11
Module over heat	OH	14
External equipment fault	EF	15
Communication fault	CO	16
Power on time reached	TE	29
Low water pressure warning	LP	24
High water pressure warning	HP	27
Short of water warning	LL	28
PID feedback lose during running (pressure sensor disconnect detection	20	31
Tips	Operate panel display	
AC drives sleeping	SLP	
Power on time reached	TE	

Fault code	Name	Possible fault reason	Solutions
OH(14)	Module overheat	1: The ambient temperature is too high. 2: The air filter is blocked 3: The fan is damaged 4: The thermally sensitive resistor of the module is damaged. 5: The AC drive module is damaged	1: Lower the ambient Temperature. 2: Glean the air filter 3: Replace the damaged fan 4: Replace the damaged thermally sensitive resistor. 5: Replace the AC drive module.
EF (15)	External equipment fault	External fault signal is input via multi-function terminal	Reset the operation
CO(16)	Communication fault	1: The host computer is in abnormal state. 2: The communication cable is faulty. 3: The communication parameters in group PD are set improperly	1: Check the cabling of host computer. 2: Check the communication cabling 3: Set the communication parameters properly.
TE (29)	Accumulative power-on time reached	The accumulative power-on time reaches the setting value	Please contact the supplier
LP (24)	Low water pressure warning	1.Pressure sensor wiring fault 2. Parameter is set improperly	1.Check the wiring of pressure sensor 2. Set the parameter properly
HP (27)	High water pressure warning		
LL(28)	Short of water warning	1.Pressure sensor wiring fault 2. Parameter is set improperly	1.Check the wiring of pressure sensor

		3.No water in tube	2.Set the parameter properly 3. Check the tube
20(31)	PID feedback lost during running fault	1.Pressure sensor with problem 2.Pressure sensor wiring fault 3. Parameter is set improperly	1. Replace the pressure sensor 2.Check the wiring of pressure sensor 3.Set the parameter properly
SLP	AC drives is sleeping		

Thank you for using the PD1000 series VF Control inverter.