PD2000 Series

Vector Control Inverter

User Manual

Chapter 1 Overview

1-1 Inverter PD2000 nameplate description

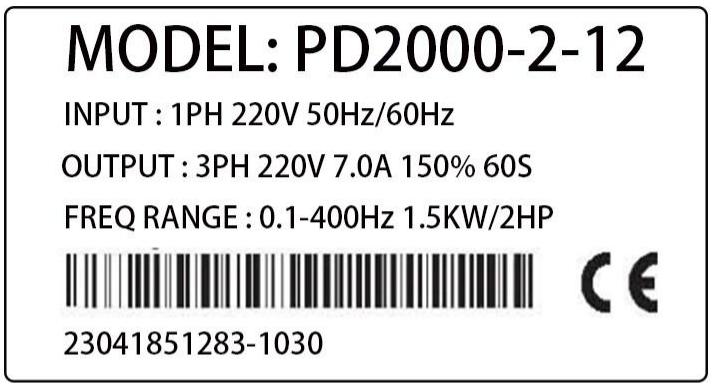

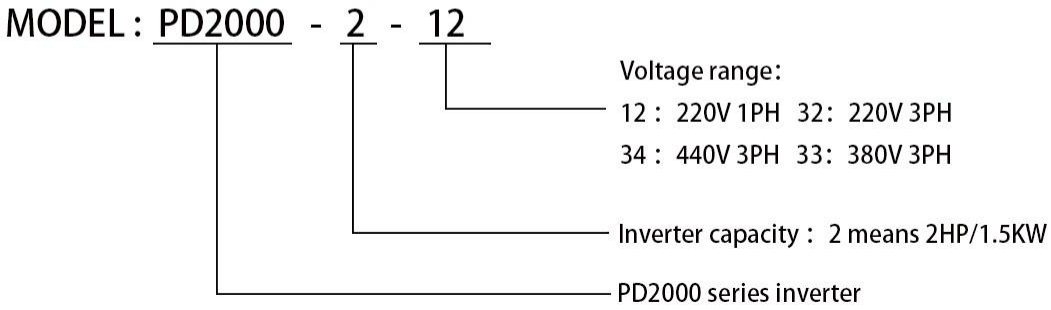

1-2 Inverter comprehensive technical characteristics

Item		Specification of PD2000 series
Basic control functions	Control method	Open loop vector control (without PG), V/F control
	Highest frequency	Vector control: 0 to 600 Hz V/F control: 0～ 320 0Hz
	Carrier frequency setting	0.5kHz ～ 16kHz The carrier frequency can be automatically adjusted according to the load characteristics.
	Input frequency resolution	Digital setting: 0.01Hz Analog setting: maximum frequency × 0.025%
	Starting torque	Model G: 0.5 Hz/150% (without PG) P-type machine: 0.5 Hz/100%
	Speed range	1:100 (without PG)
	Steady speed accuracy	± 0.5 % (without PG)
	Overload capacity	G type machine: 150% rated current 60s; 180% rated current 3s. P-type machine: 120% rated current 60s; 150% rated current 3s.

	Torque boost	Automatic torque boost; manual torque boost 0.1%~30.0%
	V/F curve	Three ways: linear type; multi-point type; N-th power V/F curve (1.2 power, 1.4 power, 1.6 power, 1.8 power, 2 power)
	V/F separation	2 ways: full separation, half separation
	Acceleration and deceleration curve	Linear or S-curve acceleration and deceleration methods. Four kinds of acceleration and deceleration time, the acceleration and deceleration time range is 0.0~6500.0s
	DC braking	DC braking frequency: 0.00Hz~maximum frequency Braking time: 0.0s~36.0s Braking current value: 0.0%~100.0%
	Jog control	Jog frequency range: 0.00Hz~50.00Hz. The jog acceleration and deceleration time is 0.0s~6500.0s.
	PLC, multi-speed operation	Realize up to 16-speed operation through built-in PLC or control terminals
	Built-in PID	Process control closed-loop control system can be easily realized
	Automatic Voltage Adjustment (AVR)	When the grid voltage changes, it can automatically keep the output voltage constant
	Overvoltage and overcurrent stall control	Automatically limit current and voltage during operation to prevent frequent overcurrent and overvoltage tripping
	Fast current limiting function	Minimize overcurrent faults and protect the normal operation of the inverter
	Torque Limiting and Control	" Excavator " feature, which automatically limits the torque during operation to prevent frequent overcurrent tripping
Personalization	Great performance	Asynchronous or synchronous motor control with high performance current vector control technology
	Instantaneous power failure	In the event of an instantaneous power failure, the voltage reduction is compensated by the load feedback energy, and the inverter continues to run for a short time.
	Fast current limiting	Avoid frequent overcurrent faults of the inverter
	Timing function	Timing control function: set the time range from 0.0 minutes to 6500.0 minutes
	Communication method	RS-485
Running	Run command channel	Operation panel given, control terminal given, serial communication port given. Switchable in a variety of ways
	Frequency source	Multiple frequency sources: digital given, analog voltage given, analog current given, serial port given. Switchable in a variety of ways
	Auxiliary frequency source	10 auxiliary frequency sources. Auxiliary frequency fine-tuning and frequency synthesis can be flexibly realized
	Input terminal	37KW and below: 4 digital input terminals; 1 analog input terminal, support 0~10V voltage input or 4~20mA current input (AVI)

		45KW and above: 6 digital input terminals, one of which supports high-speed pulse input up to 100kHz (S3 optional); 2 analog input terminals, 1 only supports 0~10V voltage input (FIV), 1 supports 0~10V voltage input or 4~20mA current input (FIC)
	Output terminal	37KW and below: 1 relay output terminal (RA, RC); 45KW and above: 1 digital output terminal (MO1) 1 relay output terminal (RA, RB, RC) 1 analog output terminal, support 0~20mA current output or 0~10V voltage output (FOV)
Keyboard display	LED display	Display parameters
	Key lock and function selection	Part or all of the keys can be locked, and the scope of action of some keys can be defined. to prevent misuse
	Protective function	Power-on motor short circuit detection, output phase loss protection, overcurrent protection, overvoltage protection, undervoltage protection, overheat protection, overload protection, etc.
Environment	Place of use	Indoor, no direct sunlight, no dust, corrosive gas, flammable gas, oil Fog, water vapor, dripping water or salt, etc.
	Altitude	Below 1000m (Above 1000m need to downshift)
	Ambient temperature	- 10 ℃ ~ + 40 ℃ (Ambient temperature is 40 ℃ ~ 50 ℃, please downshift to use)
	Humidity	Less than 95%RH , no condensation
	Vibration	Less than 5.9m/s ^{2} (0.6g)
	Storage temperature	- 20 ℃ ~ + 60 ℃
	Protection class	IP20

1-3 PD2000 series specification

Inverter model	Input voltage	Rated output power (KW/HP)	Rated input current (A)	Rated Output current (A)	Motor power (KW)
PD2000-0.5-12	1PH AC 220V ±15%	0.4	5.4	2.5	0.4
PD2000-1-12		0.75	7.2	5.0	0.75
PD2000-2-12		1.5	10.0	7.0	1.5
PD2000-3-12		2.2	16	11	2.2
PD2000-5-12		3.7	24	16.5	3.7
PD2000-0.5-33		0.4	3.4	1.2	0.4
PD2000-1-33		0.75	3.8	2.5	0.75
PD2000-2-33		1.5	5.0	3.7	1.5
PD2000-3-33		2.2	5.8	5.0	2.2
PD2000-5-33		3.7 /5.5	10/15	9/13	3.7 /5.5
PD2000-7-33		5.5 /7.5	15/20	13/27	5.5 /7.5

PD2000-10-33	3PH AC 380V ±15%	7.5/ 11	20/26	17/25	7.5/ 11
PD2000-15-33		11/15	26/35	25/32	11/15
PD2000-20-33		15/ 18.5	3 5/38	32/37	15/ 18.5
PD2000-25-33		18.5/ 22	3 8/46	37/45	18.5/ 22
PD2000-30-33		22/30	46/62	45/60	22/30
PD2000-40-33		30/37	62/76	60/75	30/37
PD2000-50-33		37/45	76/90	75/90	37/45
PD2000-60-33		45/55	90/105	90/110	45/55
PD2000-75-33		55	105	110	55
PD2000-100-33		75/90	140/160	150/176	75/90
PD2000-122-33		90/110	160/210	176/210	90/110
PD2000-150-33		110/132	210/240	210/253	110/132
PD2000-180-33		132/160	240/290	253/300	132/160
PD2000-220-33		160/185	290/330	300/340	160/185
PD2000-250-33		185/200	330/370	340/380	185/200
PD2000-270-33		200/220	370/410	380/420	200/220
PD2000-300-33		220/250	410/460	420/470	220/250
PD2000-340-33		250/280	460/500	470/520	250/280
PD2000-380-33		280/315	500/580	520/600	280/315
PD2000-430-33		315/350	580/620	600/640	315/350
PD2000-475-33		350/400	620/670	640/690	350/400
PD2000-545-33		400/450	670/790	690/790	400/450
PD2000-612-33		450/500	790/835	790/860	450/500

★For example, -5 means that the power is 5HP, which is 3.7KW. -12 means 1PH 220v, -33 means 3PH 380v；For the current parameters of 220V 3PH, refer to the 380V model with power *2. For example, please refer to 380V 10HP PD2000-10-33 for the current parameters of 220V3PH 5HP/3.7KW.

1-4 The appearance and installation dimensions of PD2000 series

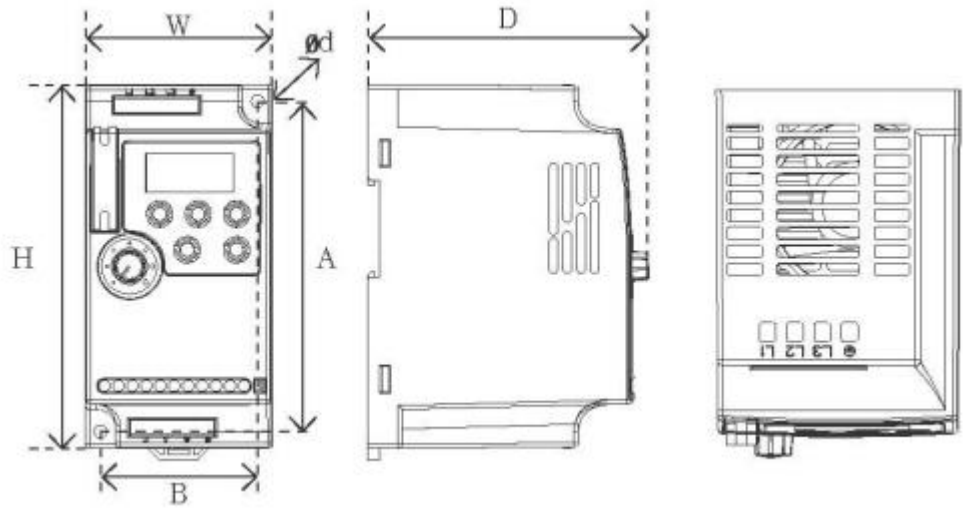

Note: Standard 35mm rail installation is supported below 7.5HP. Unit: mm

Model	Dimensions			Installation size		
	W	H	D	A	B	Φd
PD2000-0.5-12 -------- PD2000-2-12 PD2000-0.5-33 -------- PD2000-3-33	72	142	112.2	130	61	4.5
PD2000-3-12 -------- PD2000-5-12 PD2000-5-33 -------- PD2000-7-33	85	180	116	167	72	5.5
PD2000-10-33 -------- PD2000-15-33	106	240	153	230	96	4.5
PD2000-20-33 -------- PD2000-30-33	151	332	165.5	318	137	7
PD2000-40-33 -------- PD2000-50-33	217	400	201	385	202	7

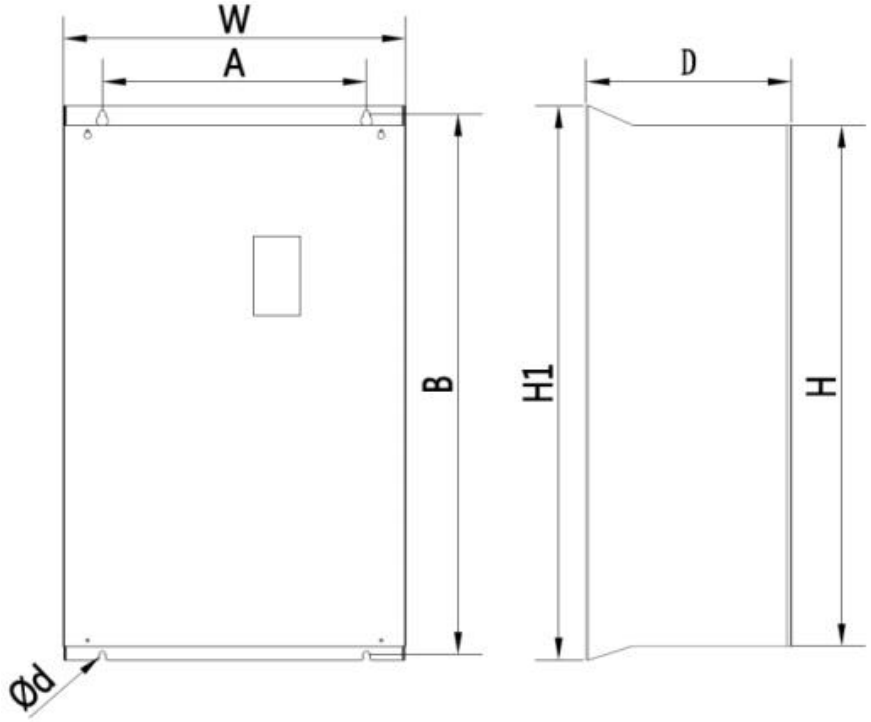

Unit: mm

Model	Dimensions				Installation size		
	W	H	H1	D	A	B	Φd
PD2000-60-33 -------- PD2000-75-33	300	440	470	240	200	455	9
PD2000-100-33 -------- PD2000-150-33	275	590	630	310	200	612	9
PD2000-180-33 -------- PD2000-220-33	400	675	715	310	320	695	11
PD2000-250-33 -------- PD2000-300-33	400	790	830	320	160+160	810	11
PD2000-340-33 -------- PD2000-430-33	530	920	970	350	215+215	950	11
PD2000-475-33 -------- PD2000-612-33	550	1120	1180	400	230+230	1150	13

★The size of 440V is the same as that of 380V. The size of 220V 3PH is the same as the size of 380V with power *2.

Chapter 2 Wiring

2-1 Definition of Control Board Terminals

1. 37KW and below



2. 45KW and above

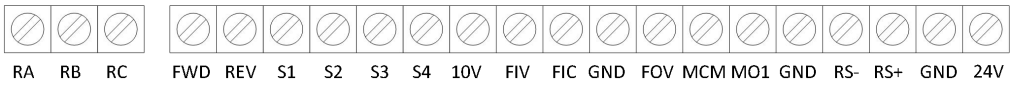

3、Control terminal description of PD2000

Terminal name	Function Definition Description	Remark
FWD	Forward command input terminal (multi-function input terminal)	Multi-function input terminal S1～S4, FWD, REV terminal can be Number P5.00～P5.05 specific set, set the terminal and valid when GND is closed
REV	Reverse command input terminal (multi-function input terminal)	
S1	fault reset	
S2	Multi-step speed command 1	
S3	Multi-step speed command 2 (high-speed pulse input)	
S4	Multi-step speed command 3	
FOV	Analog voltage output terminal	0～10V
10V	Power supply for frequency setting	
24V	Auxiliary power	
FIV	Analog voltage command input terminal	0～10V
FIC	Analog current command input terminal	0～20mA
GND	Input signal common terminal	
MCM	Optical coupling output common terminal	
MO1	Multifunctional optocoupler output contact	
RA	Relay output contact (normally open)	
RB	Relay wheel out contact (normally closed)	
RC	Common terminals of relay output contacts RA and RB	

2-2 Basic Wiring Diagram

1） (0.75KW~37KW)

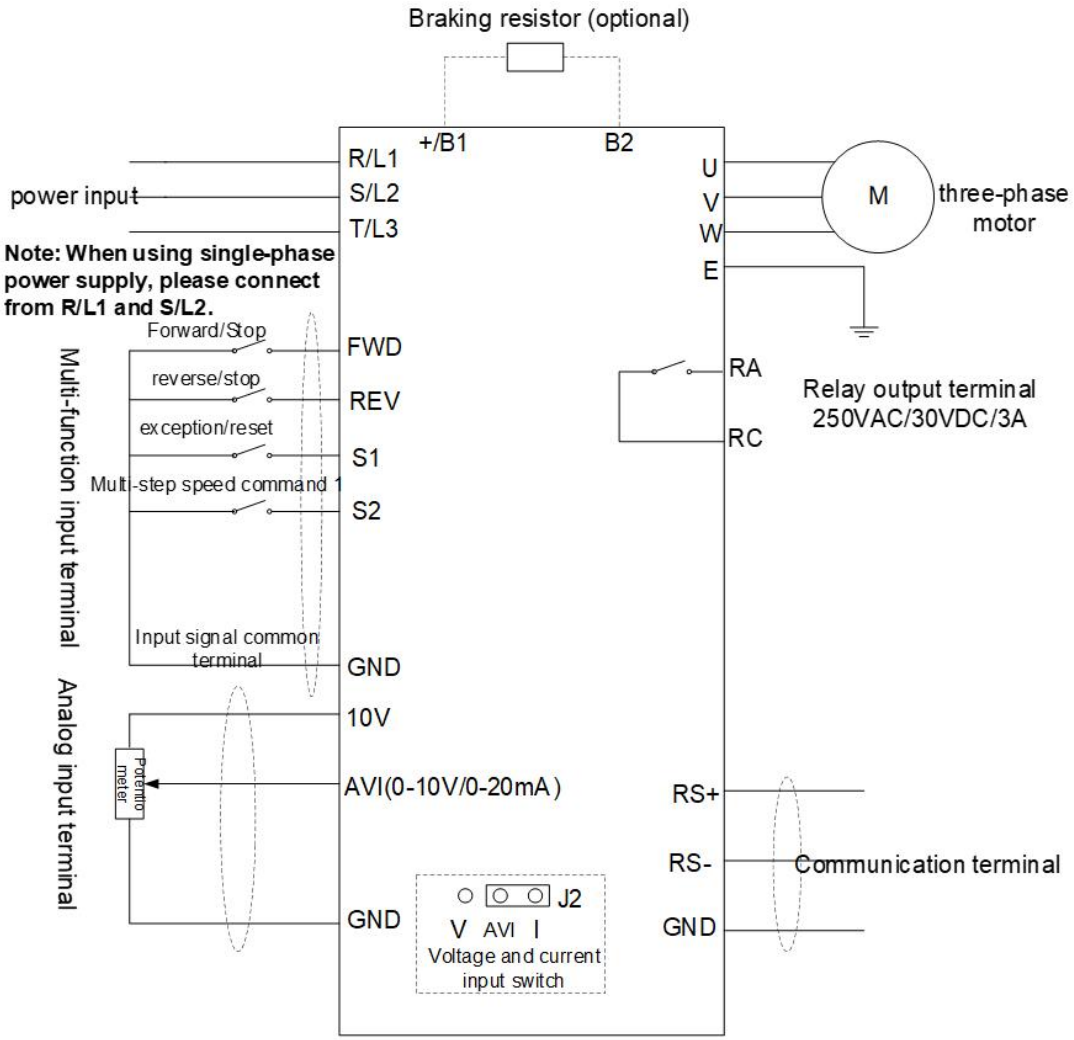

2） (45KW~450KW)

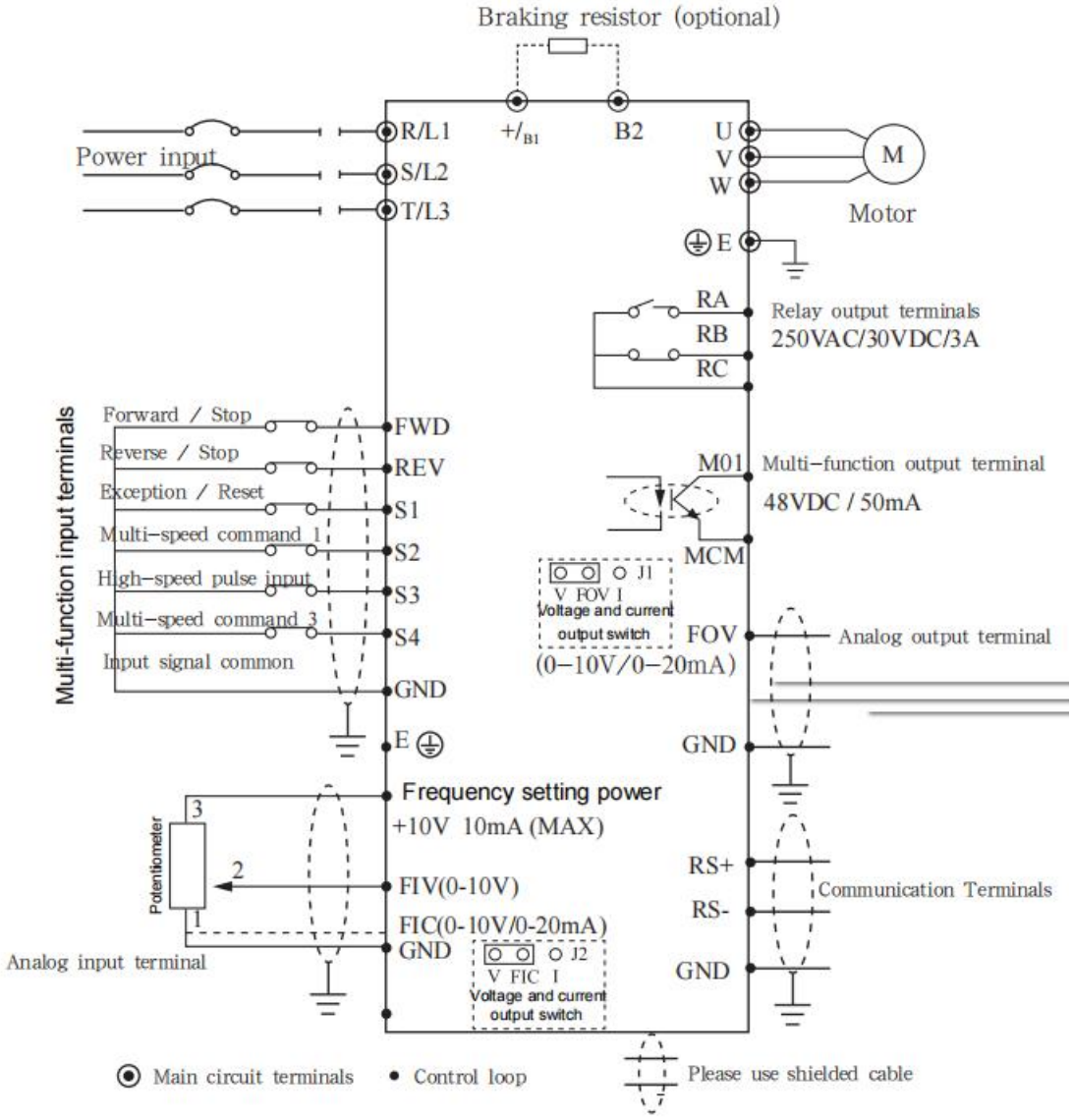
Braking resistor (optional)
Power input
R/L1
S/L2
T/L3
+/B1
B2
U
V
W
M
Motor
E
RA
RB
RC
Relay output terminals
250VAC/30VDC/3A
Multi-function input terminals
Forward / Stop
Reverse / Stop
Exception / Reset
Multi-speed command 1
High-speed pulse input
Multi-speed command 3
Input signal common
FWD
REV
S1
S2
S3
S4
GND
M01
Multi-function output terminal
48VDC / 50mA
MCM
J1
V FOV I
Voltage and current output switch
FOV
(0-10V/0-20mA)
Analog output terminal
GND
Frequency setting power
+10V 10mA (MAX)
Potentiometer
3
2
1
FIV(0-10V)
FIC(0-10V/0-20mA)
GND
Analog input terminal
J2
V FIC I
Voltage and current output switch
RS+
RS-
Communication Terminals
GND
Main circuit terminals
Control loop
Please use shielded cable

Chapter 3 PD2000 Brief List of Function Parameters

PP.00 is set to a non- zero number，param protection is enabled. You must enter the correct user password to enter the menu. To cancel the password protection function，enter with password and set PP.00 to 0.

Parameters menu the user customizes are not protected by password. Group P is the basic function parameters, group D is to monitor the function parameters.

The symbols in the function table are explained as follows:

" ☆ " : Indicates that the set value of this parameter can be changed when the inverter is in stop or running state;

" ★ " : Indicates that the set value of this parameter cannot be changed when the inverter is running;

" ● " : Indicates that the value of this parameter is the actual detection record value and cannot be changed;

"*" : Indicates that this parameter is a " manufacturer parameter " , which is limited to the manufacturer's setting, and the user is prohibited from operating.

Brief table of basic function parameters :

Function code	Name	Predetermined area	Factory default	Change
Group P0 Basic function group				
P0. 00	G / P type display	1 : G type (constant torque load type) 2 : P type (fan, water pump load type)	Model dependent	★
P0.01	Control mode selection	0 : V/F control 1 : No PG (speed sensor) vector control	0	★
P0.02	Command source selection	0 : Keyboard command channel (LED off) 1 : Terminal command channel (LED on) 2 : Communication command channel (LED flashes)	0	☆
P0.03	Frequency source superposition selection	Unit's digit ： Frequency source selection 0：Main frequency source X 1 ： X and Y operation(operation relationship determined by ten's digit) 2：Switchover between X and Y 3 ： Switchover between X and "X and Y operation"	00	☆

		4： Switchover between Y and "X and Y operation" Ten's digit (X and Y operation) 0：X+Y 1：X-Y 2：Maximum 3：Minimum		
P0.04	Main frequency source X selection	0 : Digital setting (preset frequency P0.10 , UP/DOWN can be modified, no memory after power failure) 1 : Digital setting (preset frequency P0.10 , UP/DOWN can be modified, power-off memory) 2 : FIV/Keyboard Potentiometer 3 : FIC/AVI 4 : Keyboard encoder 5 : PULSE setting (S3) 6 : Multi-segment instruction 7 : Simple PLC 8 : PID 9 : Communication given	2	★
P0.05	Auxiliary frequency source Y selection	The same as P0.04（Main frequency source X selection）	0	★
P0.06	Auxiliary frequency source superposition Y range selection	0: Relative to the maximum frequency 1: Relative to frequency source X	0	☆
P0.07	Auxiliary frequency source superposition Y range selection	0%～150%	100%	☆
P0.08	Acceleration time 1	0.00s ～ 6500.0s	Model dependent	☆
P0.09	Deceleration time 1	0.00s ～ 6500.0s	Model dependent	☆
P0.10	Preset frequency	0.00Hz～Maximum frequency (P0.12)	50.00Hz	☆
P0.11	Rotation direction	0: Same direction 1: Opposite direction	0	☆
P0.12	Maximum frequency	50.00Hz～ 32 0.00Hz	50.00Hz	★
P0.13	Upper limit frequency source	0: P0.12 setting 1: FIV /Keyboard Potentiometer 2: FIC/AVI 3: Reserved 4: PULSE setting	0	★

		5: Communication given		
P0.14	Upper limit frequency	Lower limit frequency P0.1 6 ～ Maximum frequency P0 . 1 2	50.00Hz	☆
P0.15	Upper limit frequency offset	0.00Hz～Maximum frequency P0. 12	0.00Hz	☆
P0.16	Frequency lower limit	0.00Hz～upper limit frequency P0.14	0.00Hz	☆
P0.17	Carrier frequency	1.0kHz ～16.0kHz	Model dependent	☆
P0.18	The carrier frequency is adjusted with temperature	0: No 1: yes	1	☆
P0.19	Acceleration and deceleration time unit	0 : 1 second 1 : 0.1 seconds 2 : 0.01 seconds	1	★
P0.21	Frequency offset of auxiliary source for x and y operation	0.00Hz ～Maximum frequency P0. 1 2	0.00Hz	☆
P0.22	Frequency reference	1 : 0.1Hz 2 : 0.01Hz	2	★
P0.23	Retentive of digital setting frequency upon power	0：Not retentive 1：Retentive	0	☆
P0. 24	Acceleration and deceleration time reference frequency	0 : Maximum frequency (P0.12) 1 : set frequency 2 : 100Hz	0	★
P0.25	Base frequency for UP/DOWN modification during running	0 : Running frequency 1 : Setting frequency	0	★
P0.26	Binding command source to frequency source	Units digit: Binding operation panel command to frequency source 0 : No binding 1 : Frequency source by digital setting 2 : FIV 3 : FIC/AVI 4: Reserved 5 : PULSE setting (S3) 6 : Multi-reference 7 : Simple PLC 8 : PID 9 : Communication setting ten’s	000	☆

		digit：Binding terminal command to frequency source（0-9，same as unit's digit） Hundred's digit：Binding communication command to frequency source（0-9，same as unit's digit）		
P0.27	Communication type	0 : Modbus	0	☆
Group P1 Start-stop control				
P1. 00	Start method	0 : Direct start 1 : Speed tracking restart 2 : Pre-excitation start (AC asynchronous motor)	0	☆
P1.01	Speed tracking method	0 : Start from stop frequency 1 : Start from zero speed 2 : start from maximum frequency	0	★
P1. 02	Speed tracking speed	1 to 100	20	☆
P1. 03	Start frequency	0.00Hz ~ 10.00Hz	0.00Hz	☆
P1. 04	Start frequency hold time	0.0s ～ 100.0s	0.0s	★
P1. 05	Start DC braking current / pre-excitation current	0% to 100%	0%	★
P1. 06	Start DC braking time / pre-excitation time	0.0s ～ 100.0s	0.0s	★
P1. 07	Acceleration and deceleration mode	0 : Linear acceleration/deceleration 1 : S -curve acceleration/deceleration A 2 : S -curve acceleration/deceleration B	0	★
P1. 08	Proportion of time at the beginning of the S -curve	0.0% ～（ 100.0%- P1. 09 ）	30.0%	★
P1. 09	Proportion of time at the end of the S -curve	0.0% ～（ 100.0%- P1. 08 ）	30.0%	★
P1.10	Stop mode	0 : Decelerate to stop 1 : Coast to stop	0	☆
P1.11	Initial frequency of STOP DC braking	0.00Hz ～Maximum frequency	0.00Hz	☆
P1.12	DC braking waiting time at stop	0.0s ～ 100.0s	0.0s	☆
P1.13	Stop DC braking current	0% to 100%	0%	☆
P1.14	Stop DC braking time	0.0s ～ 100.0s	0.0s	☆

P1.15	Brake use ratio	0% ~ 100%	100%	☆
Group P2 Motor parameters				
P2. 00	Motor type	0-Ordinary asynchronous motor 1-Variable frequency asynchronous motor	0	★
P2. 01	Motor rated power	0.1kW ~ 450.0kW	Model dependent	★
P2. 02	Motor rated voltage	1V ~ 2000V	Model dependent	★
P2.03	Motor rated current	0.01A ~ 655.35A (Inverter power ≤55kW) 0.1A ～ 6553.5A (Inverter power >55kW)	Model dependent	★
P2.04	Motor rated frequency	0.01Hz ～Maximum frequency	Model dependent	★
P2. 05	Rated motor rotational speed	1rpm ～ 65535rpm	Model dependent	★
P2. 06	Asynchronous motor stator resistance	0.001Ω ～ 65.535Ω (Inverter power ≤55kW) 0.0001Ω ～ 6.5535Ω (Inverter power >55kW)	Tuning parameters	★
P2. 07	Asynchronous motor rotor resistance	0.001Ω ～ 65.535Ω (Inverter power ≤55kW) 0.0001Ω ～ 6.5535Ω (Inverter power >55kW)	Tuning parameters	★
P2. 08	Asynchronous motor leakage inductance	0.01mH ～ 655.35mH (Inverter power ≤55kW) 0.001mH ～ 65.535mH (Inverter power >55kW)	Tuning parameters	★
P2. 09	Asynchronous motor mutual inductance	0.1mH ～ 6553.5mH (Inverter power ≤55kW) 0.01mH ～ 655.35mH (Inverter power >55kW)	Tuning parameters	★
P2.10	Asynchronous motor no-load current	0.01A to P2. 03 (Inverter power ≤55kW) 0.1A to P2. 03 (Inverter power >55kW)	Tuning parameters	★
P 2.11~ P 2.3 6 Reserved				
P2.37	Tuning selection	0 : No operation 1 : Asynchronous motor static auto-tuning 2 : Asynchronous motor complete auto-tuning	0	★

Group P3 Motor vector control parameters				
P3.00	Speed loop proportional gain 1	1 to 100	30	☆
P3.01	Speed loop integral time 1	0.01s ～ 10.00s	0.50s	☆
P3.02	Switchover frequency 1	0.00 to P3.05	5.00Hz	☆
P3.03	Speed loop proportional gain 2	1 to 100	20	☆
P3.04	Speed loop integral time 2	0.01s ～ 10.00s	1.00s	☆
P3.05	Switch over frequency 2	P3. 02 ～ Maximum frequency output	10.00Hz	☆
P3.06	Vector control slip gain	50% to 200%	100%	☆
P3.07	Time constant of speed loop filter	0.000s ~ 0.100s	0.000s	☆
P3.08	Vector control overexcitation gain	0 to 200	64	☆
P3.09	Torque upper limit source in speed control mode	0 : Function code P3.10 setting 1 : FIV /Keyboard Potentiometer 2 : FIC /AVI 3 : Reserved 4 : PULSE setting 5 : Communication given 6 : MIN (FIV/Keyboard Potentiometer , FIC/AVI) 7 : MAX (FIV/Keyboard Potentiometer , FIC/AVI) Full scale of options 1-7 corresponds to P3.10	0	☆
P3.10	Torque upper limit number in speed control mode set up	0.0% to 200.0%	150.0%	☆
P3.13	Excitation adjustment proportional gain	0 to 60000	2000	☆
P3.14	Excitation adjustment integral gain	0 to 60000	1300	☆
P3.15	Torque adjustment proportional gain	0 to 60000	2000	☆
P3.16	Torque adjustment integral gain	0 to 60000	1300	☆
P3.17	Speed loop integral property	Units: Integral separation 0 : Invalid 1 : Valid	0	☆

P3.18	Reserved			
P3.19	Reserved			
P3.20	Reserved			
P3.21	Reserved			
P3.22	Reserved			
Group P4 V/F control parameters				
P4. 00	VF curve setting	0 : Linear V/F 1 : Multi-point V/F 2 : Square V/F 3 : 1.2 power V/F 4 : 1.4 power V/F 6 : 1.6 power V/F 8 : 1.8 power V/F 9 : reserved 10 : VF fully separated mode 11 : VF semi-separation mode	0	★
P4. 01	Torque boost	0.0% : (Auto torque boost) 0.1% to 30.0%	Model dependent	☆
P4.02	Torque boost cut-off frequency	0.00Hz ～Maximum frequency	50.00Hz	★
P4.03	Multipoint VF Frequency Point 1（F1）	0.00Hz to P4.05	0.00Hz	★
P4.04	Multipoint VF Voltage Point 1(V1)	0.0% to 100.0%	0.0%	★
P4. 05	Multipoint VF Frequency Point 2(F2)	P4.03 to P4.07	0.00Hz	★
P4.06	Multipoint VF Voltage Point 2(V2)	0.0% to 100.0%	0.0%	★
P4.07	Multi-point VF frequency point 3(F3)	P4. 05 ～Motor rated frequency (P1. 04)	0.00Hz	★
P4.08	Multipoint VF Voltage Point 3(V3)	0.0% to 100.0%	0.0%	★
P4. 09	VF slip compensation gain	0.0% to 200.0%	0.0%	☆
P4.10	VF overexcitation gain	0 to 200	64	☆
P4.11	VF oscillation suppression gain	0 to 100	Model is determined	☆
P4.13	VF separated voltage source	0 : Digital setting (P4.14) 1 : FIV/Keyboard Potentiometer 2 : FIC/AVI 3 : reserved 4 : PULSE setting (S3) 5 : Multi-segment instruction 6 : Simple PLC	0	☆

		7 : PID 8 : Communication given Note: 100.0% corresponds to the rated voltage of the motor		
P4.14	Voltage digital setting for VF separation	0V ～Motor rated voltage	0V	☆
P4.15	Voltage Rise Time for VF Separation	0.0s ～ 1000.0s Note: Indicates the time from 0V to the rated voltage of the motor	0.0s	☆
Group P5 Input terminal parameter				
P5. 00	FWD terminal function selection	0 : No function 1 : Forward rotation operation (FWD) 2 : Reverse operation (REV) 3 : Three-wire running control 4 : Forward jog (FJOG) 5 : Reverse jog (RJOG) 6 : Terminal UP 7 : Terminal DOWN 8 : Free parking 9 : Fault reset (RESET) 10 : Operation paused 11 : External fault normally open input 12 : Multi-segment command terminal 1 13 : Multi-segment command terminal 2 14 : Multi-segment command terminal 3 15 : Multi-segment command terminal 4 16 : Acceleration and deceleration time selection terminal 1 17 : Acceleration and deceleration time selection terminal 2 18 : Frequency source switching 19 : UP/DOWN setting clear (terminal, keyboard) 20 : Running command switching terminal 21 : Acceleration and deceleration prohibition 22 : PID pause	1	★
P5.01	REV terminal function selection		4	★
P5.02	S1 terminal function selection		9	★
P5.03	S2 terminal function selection		12	★
P5.04	S3 terminal function selection		13	★
P5. 05	S4 terminal function selection		0	★
P5.06	Reserve		0	★
P5. 07	Reserve		0	★
P5.08	Reserve		0	★
P5. 09	Reserve		0	★

		23 : PLC status reset 24 : Wobble frequency pause 25 : Counter input 26 : Counter reset 27 : Length count input 28 : Length reset 29 : Torque control prohibited 30 : PULSE (pulse) frequency input (only valid for S3) 31 : reserved 32 : Immediate DC braking 33 : External fault normally closed input 34 : Frequency modification enable 35 : PID action direction is reversed 36 : External parking terminal 1 37 : Control command switching terminal 2 38 : PID integral pause 39 : Switch between frequency source X and preset frequency 40 : Switch between frequency source Y and preset frequency 41 : reserved 42 : reserved 43 : PID parameter switching 44 : reserved 45 : reserved 46 : Speed control / torque control switching 47 : Emergency stop 48 : External parking terminal 2 49 : Deceleration DC braking 50 : This running time is cleared 51-59: Reserved		
P5.10	Switch filter time	0.000s ~ 1.000s	0.010s	☆
P5.11	Terminal command mode	0 : Two-wire type 1 1 : Two-wire type 2 2 : Three-wire type 1 3 : Three-wire type 2	0	★
P5.12	Terminal UP/DOWN change rate	0.001Hz/s ~ 65.535Hz/s	1.00Hz/s	☆
P5.13	FI curve 1 minimum	0.00V to P5.15	0.00V	☆

	input			
P5.14	FI curve 1 minimum input corresponding setting	-100.0% to +100.0%	0.0%	☆
P5.15	FI curve 1 maximum input	P5. 13 ～ +10.00V	10.00V	☆
P5.16	FI curve 1 maximum input corresponding setting	-100.0% to +100.0%	100.0%	☆
P5.17	FI curve 1 filter time	0.00s ~ 10.00s	0.10s	☆
P5.18	FI curve 2 minimum input	0.00V to P5.20	0.00V	☆
P5.19	FI curve 2 minimum input corresponding setting	-100.0% to +100.0%	0.0%	☆
P5.20	FI curve 2 maximum input	P5. 18 ～ +10.00V	10.00V	☆
P5.21	F I curve 2 maximum input corresponding setting	-100.0% to +100.0%	100.0%	☆
P5.22	FI curve 2 filter time	0.00s ~ 10.00s	0.10s	☆
P5.23	FI curve 3 minimum input	-10.00V to P5.25	0.00V	☆
P5.24	FI curve 3 minimum input corresponding setting	-100.0% to +100.0%	-100.0%	☆
P5.25	FI curve 3 maximum input	P5. 23 ～ +10.00V	10.00V	☆
P5.26	FI curve 3 maximum input corresponding setting	-100.0% to +100.0%	100.0%	☆
P5.27	FI curve 3 filter time	0.00s ~ 10.00s	0.10s	☆
P5.28	PULSE minimum input	0.00kHz to P5.30	0.00kHz	☆
P5.29	PULSE minimum input corresponding setting	-100.0% to 100.0%	0.0%	☆
P5.30	PULSE max input	P5. 28 ～ 100.00kHz	50.00kHz	☆
P5.31	PULSE maximum input corresponding setting	-100.0% to 100.0%	100.0%	☆
P5.32	PULSE filter time	0.00s ~ 10.00s	0.10s	☆
		Unit's digit：FIV curve selection 1 : Curve 1 (2 points, see P5.13 ~		

P5.33	FI curve selection	P5.16) 2 : Curve 2 (2 points, see P5.18 ~ P5.21) 3 : Curve 3 (2 points, see P5.23 ~ P5.26) 4 : Curve 4 (4 points, see C6.00 ~ C6.07) 5 : Curve 5 (4 points, see C6.08 ~ C6.15) Ten's digit: FIC curve selection（1~5,same as FIV） Hundred's digit ： FIA curve selection（1~5，same as FIV）	321	☆
P5.34	Setting selection for FI less than minimum input	Unit's digit: setting for FIV less than minimum input 0: Minimum value 1：0.0% Ten's digit: Setting for FIC less than minimum input(0~1,same as FIV) Hundred's digit ： Setting for FIA less than minimum input(0~1，same as FIV)	000	☆
P5.35	FWD delay time	0.0s ～ 3600.0s	0.0s	★
P5.36	REV delay time	0.0s ～ 3600.0s	0.0s	★
P5.37	S1 delay time	0.0s ～ 3600.0s	0.0s	★
P5.38	S terminal valid mode selection 1	0 : High level Vaild 1 : Low level Vaild Unit's digit: FWD Ten's digit: REV Hundred's digit: S1 Thousand's digit: S2 Ten thousand's digit: S3	00000	★
P5.39	S terminal valid mode selection 2	0：High level valid 1：Low level valid Unit's digit：S4 Ten's digit：Reserved Hundred's digit：Reserved Thousand's digit：Reserved Ten thousand's digit：Reserved	00000	★
Group P6 output terminal				
P6. 00	MO1 terminal output mode selection	1 : Switch output (MO1)	0	☆
P6. 01	MO1 output function selection	0 : No output 1 : Inverter is running	0	☆

P6. 02	Relay output function （RA-RC/RA-RB-RC）	2 : Fault output (stop) 3 : Frequency level detection FDT1 output 4 : Frequency arrives 5 : Running at zero speed (no output when stopped) 6 : Motor overload pre-alarm 7 : Inverter overload pre-alarm 8 : Set the count value to reach 9： Designated count value reached 10 : Length reached 11 : PLC cycle completed 12 : Accumulated running time reached 13 : Frequency limited 14 : Torque limited 15 : Ready to run 16 : FIV/Keyboard Potentiometer > FIC/AVI 17 : The upper limit frequency is reached 18 : Lower limit frequency reached (no output at stop) 19 : Undervoltage status output 20 : Communication settings 21 : Positioning completed (reserved) 22 : Positioning close (reserved) 23 : Zero-speed running 2 (also output when stopped) 24 : Cumulative power-on time arrives 25 : Frequency level detection FDT2 output 26 : Frequency 1 arrives at the output 27 : Frequency 2 arrives at the output 28 : Current 1 reaches the output 29 : Current 2 reaches the output 30 : Timed arrival output 31 : FIV input limit exceeded 32 : Load becoming 0 33 : Reverse operation	2	☆
P6. 03	Reserved			☆
P6. 04	Reserved			☆
P6. 05	Reserved			☆

		34 : Zero current state 35 : Module temperature reached 36 : Software current limit exceeded 37 : Frequency lower limit reached (having output at stop) 38 : Alarm output (continue operation) 39 : Reserved 40 : The running time has arrived		
P6. 06	Reserve	0 : Running frequency	0	☆
P6.07	F O V output function selection	1 : set frequency 2 : Output current	0	☆
P6.08	F O C output function selection (Reserved)	3 : Output torque 4 : Output power 5 : Output voltage 6 : PULSE input (100.% corresponds to 100.0kHz) 7 : FIV/Keyboard Potentiometer 8 : FIC/AVI 9 : reserved 10 : length 11 : count value 12 : Communication settings 13 : Motor speed 14 : Output current (100.0% corresponds to 1000.0A) 15 : Output voltage (100.0% corresponds to 1000.0V) 16 : Reserved	1	☆
P6. 09	Reserved			☆
P6.10	F O V zero bias coefficient	-100.0% to +100.0%	0.0%	☆
P6.11	F O V gain	-10.00 to +10.00	1.00	☆
P6.12	F O C zero bias coefficient	-100.0% to +100.0%	0.0%	☆
P6.13	F O C gain	-10.00 to +10.00	1.00	☆
P6.17	MO1 output delay time	0.0s ～ 3600.0s	0.0s	☆
P6.18	RA-RB-RC output delay time	0.0s ～ 3600.0s	0.0s	☆
P6.19	Reserved			
P6.20	Reserved			
P6. 21	Reserved			
P6.22		0 : Positive logic	00	☆

	Output terminal valid state selection	1 : Negative logic Unit's digit: MO1 Ten's digit: RA-RB-RC Hundreds: reserved Thousands: reserved Ten thousand: reserved		
Group P7 keyboard and display				
P7. 0 0	Output power correction factor	0.0~200.0	1 0 0.0	☆
P7.01	JOG function parameter （Above 45KW，Reserved）	0 : This key has no function. 1 : Switch between keyboard commands and remote operations. Refers to the switching of the command source, that is, the switching between the current command source and keyboard control (local operation). If the current command source is keyboard control, the function of this key is invalid. 2 : Forward and reverse switching Use the JOG key to switch the direction of the frequency command. This function is only valid when the command source is the operation panel command channel. 3 : Forward jog Forward jog (JOG -FWD) is realized by the keyboard JOG key. 4 : Reverse jog Reverse jog (JOG -REV) is realized by the keyboard JOG key. 5: The keyboard with 6 keys, the stop key is valid.	0	★
P7. 02	STOP/RESET key function	0：STOP/RESET key enabled only in operation panel control 1：STOP/RESET key enabled in any operation mode	1	☆
t		0000 to FFFF Bit00: Running frequency 1 (Hz) Bit01: set frequency (Hz) Bit02: Bus voltage (V) Bit03: Output voltage (V)		

	LED running display parameter 1	Bit04: Output current (A) Bit05: Output power (kW) Bit06: Output torque (%) Bit07: S input status Bit08: MO1 output status Bit09: FIV/Keyboard Potentiometer Voltage (V) Bit10: FIC/AVI voltage (V) Bit11: Reserved Bit12: count value Bit13: length value Bit14: Load speed display Bit15: PID setting	1F	☆
P7.04	LED running display parameter 2	0000 to FFFF Bit00 : PID feedback Bit01 : PLC stage Bit02 : PULSE input pulse frequency (kHz) Bit03 : Running frequency 2 (Hz) Bit04 : Remaining running time Bit05 : FIV/Keyboard potentiometer voltage before correction (V) Bit06 : Voltage before FIC/AVI correction (V) Bit07 : Reserved Bit08 : Linear speed Bit09 : Current power-on time (Hour) Bit10 : Current running time (Min) Bit11 : PULSE input pulse frequency (Hz) Bit12 : Communication setting value Bit13 : reserved Bit14 : Main frequency X display (Hz) Bit15 : Secondary frequency Y display (Hz)	0	☆
P7. 05	LED stop display parameters	0000 to FFFF Bit00: set frequency (Hz) Bit01: Bus voltage (V) Bit02: X input status	33	☆

		Bit03: Y O output status Bit04: FIV/Keyboard Potentiometer Voltage (V) Bit05: FIC/AVI voltage (V) Bit06: Reserved Bit07: count value Bit08: length value Bit09: PLC stage Bit10: Load speed Bit11: PID setting Bit12: PULSE setting frequency (kHz) Bit1 3 : PID feedback value		
P7.06	Load speed display coeffcient	0.0001 to 6.5000	1.0000	☆
P7. 07	Inverter module heat sink temperature	0.0 ℃～ 100.0 ℃	-	●
P7. 08	Temporary software version	0.0 ℃～ 100.0 ℃	-	●
P7. 09	Cumulative running time	0h ～ 65535h	-	●
P7.10	reserve	-	-	●
P7.11	Software version	-	-	●
P7.12	Load speed display decimal places	0 : 0 decimal places 1 : 1 decimal place 2 : 2 decimal places 3 : 3 decimal places	1	☆
P7.13	Cumulative power-on time	0h ～ 65535h	-	●
P7.14	Cumulative power consumption	0 kwh ～ 65535 kwh	-	●
Group P8 Auxiliary Functions				
P8.00	Jog running frequency	0.00Hz ～Maximum frequency	2.00Hz	☆
P8.01	Jog acceleration time	0.0s ～ 6500.0s	20.0s	☆
P8.02	Jog deceleration time	0.0s ～ 6500.0s	20.0s	☆
P8.03	Acceleration time 2	0.0s ～ 6500.0s	Model dependent	☆
P8.04	deceleration time 2	0.0s ～ 6500.0s	Model dependent	☆
P8. 05	Acceleration time 3	0.0s ～ 6500.0s	Model dependent	☆
P8. 06	Deceleration time 3	0.0s ～ 6500.0s	Model dependent	☆
P8.07	Acceleration time 4	0.0s ～ 6500.0s	Model	☆

			dependent	
P8.08	Deceleration time 4	0.0s ～ 6500.0s	Model dependent	☆
P8.09	Hop Frequency 1	0.00Hz ～Maximum frequency	0.00Hz	☆
P8.10	Hop Frequency 2	0.00Hz ～Maximum frequency	0.00Hz	☆
P8.11	Hop Frequency Amplitude	0.00Hz ～Maximum frequency	0.0 0 Hz	☆
P8.12	Forward/Reverse rotation dead-zone time	0.0s ～ 3000.0s	0.0s	☆
P8.13	Reversed control	0 : Enable 1 : Disable	0	☆
P8.14	The set frequency is lower than the lower limit frequency operating mode	0 : operate at the lower frequency limit 1 : stop 2 : Zero speed operation	0	☆
P8.15	Droop control	0.00Hz ~ 10.00Hz	0.00Hz	☆
P8.16	Accumulative power-on time threshold	0h ～ 65000h	0h	☆
P8.17	Accumulative running time threshold	0h ～ 65000h	0h	☆
P8.18	Boot protection selection	0: Not protected 1: Protected	0	☆
P8.19	Frequency detection value (FDT1)	0.00Hz ～Maximum frequency	50.00Hz	☆
P8.20	Frequency detection hysteresis value (FDT1)	0.0% to 100.0% (FDT1 level)	5.0%	☆
P8.21	Frequency arrival detection width	0.0% to 100.0% (maximum frequency)	0.0%	☆
P8.22	Jump frequency during acceleration and deceleration is it effective	0 : Invalid 1 : Valid	0	☆
P8.25	Acceleration time 1 and acceleration time 2 switch frequency points	0.00Hz ～Maximum frequency	0.00Hz	☆
P8.26	Deceleration time 1 and deceleration time 2 switch frequency points	0.00Hz ～Maximum frequency	0.00Hz	☆
P8.27	Terminal jog priority	0 : Invalid 1 : Valid	0	☆
P8. 28	Frequency detection	0.00Hz ～Maximum frequency	50.00Hz	☆

	value (FDT2)			
P8.29	Frequency detection hysteresis value (FDT2)	0.0% to 100.0% (FDT2 level)	5.0%	✯
P8.30	Any frequency reaching detection value 1	0.00Hz ～Maximum frequency	50.00Hz	☆
P8.31	Any frequency reaching detection amplitude 1	0.0% to 100.0% (maximum frequency)	0.0%	☆
P8.32	Any frequency reaching detection value 2	0.00Hz ～Maximum frequency	50.00Hz	☆
P8.33	Any frequency reaching detection amplitude 2	0.0% to 100.0% (maximum frequency)	0.0%	☆
P8.34	Zero current detection level	0.0% to 300.0% 100.0% corresponds to the rated current of the motor	5.0%	☆
P8.35	Zero current detection delay time	0.01s ～ 600.00s	0.10s	☆
P8.36	The output current exceeds the limit	0.0% (not detected) 0.1% to 300.0% (motor rated current)	200.0%	☆
P8.37	Output current overrun detection delay time	0.00s ～ 600.00s	0.00s	☆
P8.38	Arbitrary arrival current 1	0.0% to 300.0% (motor rated current)	100.0%	☆
P8.39	Arbitrary arrival current 1 width	0.0% to 300.0% (motor rated current)	0.0%	☆
P8.40	Arbitrary arrival current 2	0.0% to 300.0% (motor rated current)	100.0%	☆
P8.41	Arbitrary arrival current 2 width	0.0% to 300.0% (motor rated current)	0.0%	☆
P8.42	Timing function selection	0: invalid 1: valid	0	☆
P8.43	Timing run time selection	0 : P8.44 setting 1 : FIV/Keyboard Potentiometer 2 : FIC/AVI 3 : reserved Analog input range corresponds to P8. 44	0	☆
P8.44	Timing run time	0.0Min ～ 6500.0Min	0.0Min	☆
P8.45	FIV/keyboard	0.00V to P8.46	3.10V	☆

	potentiometer input voltage protection lower limit			
P8.46	FIV input voltage protection value upper limit	P8. 45 ～ 10.00V	6.80V	☆
P8.47	Module temperature threshold	0 ℃～ 100 ℃	75 ℃	☆
P8.48	Cooling Fan Control	0 : Fan runs during operation 1 : The fan keeps running	0	☆
P8.49	wake up frequency	Sleep frequency (P8.51) ~ maximum frequency (P0.12)	0.00Hz	☆
P8.50	Wake up delay time	0.0s ～ 6500.0s	0.0s	☆
P8.51	Sleep frequency	0.00Hz ~ Wake-up frequency (P8. 49)	0.00Hz	☆
P8.52	Dormant delay time	0.0s ～ 6500.0s	0.0s	☆
P8.53	Arrival time setting for this operation	0.0Min ～ 6500.0Min	0.0Min	☆
Group P9 Fault and Protection				
P9. 00	Motor overload protection selection	0 : Disable 1 : Enable	1	☆
P9.01	Motor overload protection gain	0.20 to 10.00	1.00	☆
P9.02	Motor overload warning factor	50% to 100%	80%	☆
P9.03	Overvoltage Stall Gain	0 to 100	0	☆
P9.04	Overvoltage stall protection voltage	120% to 150%	130%	☆
P9.05	Overcurrent Stall Gain	0 to 100	20	☆
P9.06	Overcurrent Stall Protection Current	100% to 200%	150%	☆
P9.07	Power-on to ground short-circuit protection selection	0 : Invalid 1 : Valid	1	☆
P9.09	Fault automatic reset times	0 to 20	0	☆
P9.10	Fault MO1 action selection during fault automatic reset	0 : no action 1 : Action	0	☆
P9.11	Fault automatic reset interval time	0.1s ～ 100.0s	1.0s	☆
P9.12	Reserved			☆
P9.13	Output phase loss	0 : Disable 1 : Enable	1	☆

	protection selection			
P9.14	Type of first failure	0：No fault 1：Inverter unit protection 2: Over-current during acceleration 3: Over-current during deceleration 4: Over-current at constant speed 5: Over-voltage during acceleration 6: Over-voltage during deceleration 7: Over-voltage at constant speed 8: Buffer resistance overload 9: Under voltage 10: AC drive overload 11: Motor overload 12: Reserved		●
P9.15	Second fault type	13 : Output phase loss 14 : Module overheating 15 : External equipment fault 16 : Communication error 17 : The contactor is abnormal 18 : Abnormal current detection 19 : Motor auto-tuning fault 20 : Reserved 21 : EEPROM read-write fault 22 : AC drive hardware fault 23 : Motor short circuit to ground 24 : Reserved 25 : Reserved	-	●
P9.16	Third (latest) failure type	26 : Accumulative power running time reached 27: Reserved 28: Reserved 29: Accumulative power-on time reached 30 : Load becoming 0 31 : Loss of PID feedback during runtime 40 : With-wave current limit fault 41 : Reserved 42: Reserved 43 : Reserved 51 : Reserved	-	●
P9.17	Frequency upon 3rd fault	-	-	●
P9.18	Current upon 3rd fault	-	-	●

P9.19	Bus voltage upon 3rd fault	-	-	●
P9.20	Input terminal status upon 3rd fault	-	-	●
P9.21	Output terminal status upon 3rd fault	-	-	●
P9.22	AC drives status upon 3rd fault	-	-	●
P9.23	Power-on time upon 3rd fault	-	-	●
P9.24	Running time upon 3rd fault	-	-	●
P9.27	Frequency at second failure	-	-	●
P9.28	Current at the second fault	-	-	●
P9.29	Bus voltage at the second fault	-	-	●
P9.30	Input terminal status at the second fault	-	-	●
P9.31	Output terminal status at the second fault	-	-	●
P9.32	Frequency upon 2nd fault	-	-	●
P9.33	Current upon 2nd fault	-	-	●
P9.34	Bus voltage upon 2nd fault	-	-	●
P9.37	Input terminal status upon 1st fault	-	-	●
P9.38	Output terminal status upon 1st fault	-	-	●
P9.39	Frequency upon 1st fault	-	-	●
P9.40	Current upon 1st fault	-	-	●
P9.41	Bus voltage upon 3rd fault	-	-	●
P9.42	Input terminal status upon 1st fault	-	-	●
P9.43	Output terminal status upon 1st fault	-	-	●
P9.44	Frequency upon 1st fault	-	-	●
P9.47	Fault protection action	Unit's digit: Motor overload	00000	☆

	selection 1	(OL1) 0 : Coast to stop 1 : Stop according to the stop mode 2 : keep running Ten's digit: reserved Hundred's digit: power output phase loss (LO) Thousand's digit: External equipment fault (EF) Ten thousand's digit: Communication fault (CE)		
P9.48	Fault protection action selection 2	Unit's digit: reserved 0 : Coast to stop Tens digit: EEPROM read-write fault (EEP) 0 : Coast to stop 1 : Stop according to the stop mode Hundreds digit: reserved Thousands digit: reserved Ten thousand's digit: accumulative running time reached (END1)	00000	☆
P9.49	Fault protection action selection 3	Unit's digit reserved Unit's digit Reserved 0:Coast to stop 1:Stop according to the stop mode 2:Continue to run Ten's digit: Reserved 0:Coast to stop 1:Stop according to the stop mode 2:Continue to run Hundred's digit: Accumulative power-on time reached(END2) 0:Coast to stop 1:Stop according to the stop mode 2:Continue to run Thousand's digit: Load becoming 0 0:Coast to stop 1:Stop according to the stop mode 2:Continue to run at 7% of rated motor frequency and resume to the set frequency if the load recovers Ten thousand's digit: PID feedback loss of running 0:Coast to stop	00000	☆

		1: Stop according to the stop mode 2:Continue to run		
P9.50	Reserved			☆
P9.54	Frequency selection for continuing to run	O:Current running frequency 1:Set frequency 2:Frequency upper limit 3:Frequency lower limit 4:Backup frequency upon abnormality	0	☆
P9.55	Abnormal backup frequency	60.0% ～ 100.0% (100.0% corresponds to the maximum frequency P0.12)	100.0%	☆
P9.56	Reserved			
P9.57	Reserved			
P9.58	Reserved			
P9.59	Action selection at instantaneous power failure	0 : Invalid 1 : Decelerate 2 : Decelerate to stop	0	☆
P9.60	Action pause judging voltage at instantaneous power failure	0.0% ～ 100.0%	100.0%	☆
P9.61	Voltage rally judging time at instantaneous power failure	0.00s ～ 100.00s	0.50s	☆
P9.62	Instantaneous non-stop action to judge the voltage	60.0% to 100.0% (standard bus voltage)	80.0%	☆
P9.63	Protection upon load becoming 0	0 : Invalid 1 : Valid	0	☆
P9.64	Detection level of load becoming 0	0.0 to 100.0 %	10.0%	☆
P9.65	Detection time of load becoming 0	0.0 ～ 60.0s	1.0s	☆
P9.67	Reserved			☆
P9.68	Reserved			☆
P9.69	Reserved			☆
P9.70	Reserved			☆
Group PA: Process Control PID Function				
PA. 00	PID given source	0:PA.01 1:FIV 2:FIC/AVI	0	☆

		3:Reserved 4:PULSE setting(S3) 5:Communication setting 6:Multi-reference		
PA. 01	PID digital setting	0.0% to 100.0%	50.0%	☆
PA. 02	PID feedback source	0 : FIV/Keypad Potentiometer 1 : FIC/AVI 2 : Reserved 3 : FIV/Keyboard Potentiometer - FIC/AVI 4 : PULSE setting (S3) 5 : Communication given 6 : FIV/keyboard potentiometer + FIC/AVI 7 : MAX (| FIV/Keyboard Potentiometer |, | FIC/AVI |) 8 : MIN (| FIV/Keyboard Potentiometer |, | FIC/AVI |)	0	☆
PA. 03	PID action direction	0 : positive action 1 : Reverse action	0	☆
PA. 04	PID given feedback range	0 to 65535	1000	☆
PA. 05	Proportional gain Kp1	0.0 to 100.0	20.0	☆
PA. 06	Integration time Ti1	0.01s ～ 10.00s	2.00s	☆
PA. 07	Differential time Td1	0.000s ～ 10.000s	0.000s	☆
PA. 08	Cut-off frequency of PID reverse rotation	0.00 to maximum frequency	2.00Hz	☆
PA. 09	PID deviation limit	0.0% to 100.0%	0.0%	☆
PA. 10	PID differential limite	0.00% to 100.00%	0.10%	☆
PA. 11	PID given change time	0.00 ～ 650.00s	0.00s	☆
PA. 12	PID feedback filter time	0.00 ～ 60.00s	0.00s	☆
PA. 13	PID output filter time	0.00 ～ 60.00s	0.00s	☆
PA. 14	Reserved	-	-	☆
PA. 15	Proportional gain Kp2	0.0 to 100.0	20.0	☆
PA. 16	Integration time Ti2	0.01s ～ 10.00s	2.00s	☆
PA. 17	Differential time Td2	0.000s ～ 10.000s	0.000s	☆
PA. 18	PID parameter switchover conditions	0 : Do not switch 1 : Switched by S terminal 2 : Automatic switching according to deviation	0	☆
PA. 19	PID parameter switching deviation 1	0.0% to PA. 20	20.0%	☆
PA. 20	PID parameter	PA. 19 to 100.0%	80.0%	☆

	switching deviation 2			
PA. 21	PID initial value	0.0% to 100.0%	0.0%	☆
PA. 22	PID initial value hold time	0.00 ～ 650.00s	0.00s	☆
PA. 23	Maximum deviation between two PID outputs in forward	0.00% to 100.00%	1.00%	☆
PA. 24	Maximum deviation between two PID outputs in reverse	0.00% to 100.00%	1.00%	☆
PA. 25	PID integral properties	Unit's digitIntegral separated O:Invalid 1:Valid Ten's digit:Whether to stop integral operation when the output reaches 0:Continue integral operation 1:Stop integral operation	00	☆
PA. 26	PID feedback loss detection value	0.0%:Not judging feedback loss 0.1%~100.0%	0.0%	☆
PA. 27	PID feedback loss detection time	0.0s ～ 20.0s	0.0s	☆
PA. 28	PID shutdown operation	0: No PID operation at stop 1: PID operation at stop	0	☆
Group Pb: Swing Frequency, Fixed Length and Count				
Pb. 00	Swing frequency setting mode	0: Relative to the central frequency 1: Relative to the maximum frequency	0	☆
Pb. 01	Swing frequency amplitude	0.0% to 100.0%	0.0%	☆
Pb. 02	Jump frequency amplitude	0.0% to 50.0%	0.0%	☆
Pb. 03	Swing frequency cycle	0.1s ～ 3000.0s	10.0s	☆
Pb. 04	Triangular wave rising time coefficient	0.1% to 100.0%	50.0%	☆
Pb. 05	set length	0m ～ 65535m	1000m	☆
Pb. 06	Actual length	0m ～ 65535m	0m	☆
Pb. 07	Number of pulses per meter	0.1 to 6553.5	100.0	☆
Pb. 08	Set count value	1 to 65535	1000	☆
Pb. 09	Designated count value	1 to 65535	1000	☆

Group PC: Multi-Reference and Simple PLC Function				
PC. 00	Multi-segment instruction 0	-100.0% to 100.0%	0.0%	☆
PC. 01	Multi-segment instruction 1	-100.0% to 100.0%	0.0%	☆
PC. 02	Multi-segment instruction 2	-100.0% to 100.0%	0.0%	☆
PC. 03	Multi-segment instruction 3	-100.0% to 100.0%	0.0%	☆
PC. 04	Multi-segment instruction 4	-100.0% to 100.0%	0.0%	☆
PC. 05	Multi-segment instruction 5	-100.0% to 100.0%	0.0%	☆
PC. 06	Multi-segment instruction 6	-100.0% to 100.0%	0.0%	☆
PC. 07	Multi-segment instruction 7	-100.0% to 100.0%	0.0%	☆
PC. 08	Multi-segment instruction 8	-100.0% to 100.0%	0.0%	☆
PC. 09	Multi-segment instruction 9	-100.0% to 100.0%	0.0%	☆
PC. 10	Multi-segment instruction 10	-100.0% to 100.0%	0.0%	☆
PC. 11	Multi-segment instruction 11	-100.0% to 100.0%	0.0%	☆
PC. 12	Multi-segment instruction 12	-100.0% to 100.0%	0.0%	☆
PC. 13	Multi-segment instruction 13	-100.0% to 100.0%	0.0%	☆
PC. 14	Multi-segment instruction 14	-100.0% to 100.0%	0.0%	☆
PC. 15	Multi-segment instruction 15	-100.0% to 100.0%	0.0%	☆
PC. 16	Simple PLC operation mode	0 : Stop after a single operation 1 : keep the final value at the end of a single run 2 : keep looping	0	☆
PC. 17	Simple PLC power-down memory selection	Unit's digit: Retentive upon power failure 0:No 1:Yes Ten's digit: Retentive upon stop 0:No 1:Yes	00	☆
PC. 18	Simple PLC section 0 running time	0.0s (h)～ 6553.5s (h)	0.0s(h)	☆

PC. 19	Simple PLC section 0 acceleration and deceleration time selection	0 to 3	0	☆
PC. 20	Running time of simple PLC reference1	0.0s (h)～ 6553.5s (h)	0.0s (h)	☆
PC. 21	Acceleration/ deceleration time of simple PLC reference 1	0 to 3	0	☆
PC. 22	Running time of simple PLC reference2	0.0s (h)～ 6553.5s (h)	0.0s (h)	☆
PC. 23	Acceleration/ deceleration time of simple PLC reference 2	0 to 3	0	☆
PC. 24	Simple PLC section 3 running time	0.0s (h)～ 6553.5s (h)	0.0s (h)	☆
PC. 25	Simple PLC section 3 acceleration and deceleration time selection	0 to 3	0	☆
PC. 26	Running time of simple PLC reference 4	0.0s (h)～ 6553.5s (h)	0.0s (h)	☆
PC. 27	Acceleration/ deceleration time of simple PLC reference 4	0 to 3	0	☆
PC. 28	Simple PLC section 5 running time	0.0s (h)～ 6553.5s (h)	0.0s (h)	☆
PC. 29	Simple PLC section 5 acceleration and deceleration time selection	0 to 3	0	☆
PC. 30	Simple PLC section 6 running time	0.0s (h)～ 6553.5s (h)	0.0s (h)	☆
PC. 31	Simple PLC section 6 acceleration and deceleration time choose	0 to 3	0	☆
PC. 32	Simple PLC section 7	0.0s (h)～ 6553.5s (h)	0.0s (h)	☆

	running time			
PC. 33	Simple PLC section 7 acceleration and deceleration time choose	0 to 3	0	☆
PC. 34	Simple PLC section 8 running time	0.0s (h)～ 6553.5s (h)	0.0s (h)	☆
PC. 35	Simple PLC section 8 acceleration and deceleration time choose	0 to 3	0	☆
PC. 36	Simple PLC section 9 running time	0.0s (h)～ 6553.5s (h)	0.0s (h)	☆
PC. 37	Simple PLC section 9 acceleration and deceleration time choose	0 to 3	0	☆
PC. 38	Simple PLC section 10 running time	0.0s (h)～ 6553.5s (h)	0.0s (h)	☆
PC. 39	Simple PLC section 10 acceleration and deceleration time choose	0 to 3	0	☆
PC. 40	Simple PLC section 11 running time	0.0s (h)～ 6553.5s (h)	0.0s (h)	☆
PC. 41	Simple PLC section 11 acceleration and deceleration time choose	0 to 3	0	☆
PC. 42	Simple PLC section 12 running time	0.0s (h)～ 6553.5s (h)	0.0s (h)	☆
PC. 43	Simple PLC section 12 acceleration and deceleration time choose	0 to 3	0	☆
PC. 44	Simple PLC section 13 running time	0.0s (h)～ 6553.5s (h)	0.0s (h)	☆
PC. 45	Simple PLC section 13 acceleration and deceleration time choose	0 to 3	0	☆
PC. 46	Simple PLC section 14 running time	0.0s (h)～ 6553.5s (h)	0.0s (h)	☆
PC. 47	Simple PLC section 14	0 to 3	0	☆

	acceleration and deceleration time selection			
PC. 48	Simple PLC section 15 running time	0.0s (h)～ 6553.5s (h)	0.0s (h)	☆
PC. 49	Simple PLC section 15 acceleration and deceleration time selection	0 to 3	0	☆
PC. 50	Simple PLC running time unit	0 : s (seconds) 1 : h (hours)	0	☆
PC. 51	Reference 0 source	0 : Function code PC. 00 given 1 : FIV/Keyboard Potentiometer 2 : FIC/AVI 3 : reserved 4 : PULSE setting 5 : PID 6 : Preset frequency (P0.10) given, UP /DOWN can be modified	0	☆
Group PD: Communication Parameters				
PD. 00	Baud rate	Unit's digit: MODBUS 0 : 300BPS 1 : 600BPS 2 : 1200BPS 3 : 2400BPS 4 : 4800BPS 5 : 9600BPS 6 : 19200BPS 7 : 38400BPS 8 : 57600BPS 9 : 115200BPS Ten's digit: reserved Hundred's digit: reserved Thousand's digit: reserved	0005	☆
PD. 01	Data Format	0: No check, data format <8,N,2> 1: Even parity check, data format<8,E,1> 2: Odd Parity check, data format<8,0,1> 3:No check, data format <8,N,1> Valid for Modbus	3	☆
PD. 02	Local address	1 to 247 , 0 is the broadcast address	1	☆
PD. 03	response delay	0ms ~ 20ms	2	☆
PD. 04	Communication	0.0 (invalid), 0.1s to 60.0s	0.0	☆

	timeout			
PD. 05	Modbus protocol selection	Unit's digit: Modbus protocol 0: Non-standard Modbus protocol 1: Standard Modbus protocol Ten's digit: reserved	1	☆
PD. 06	Communication reading current resolution	0 : 0.01A 1 : 0.1A	0	☆
Group PE: reserved				
Group PP: User-Defined Function Codes				
PP. 00	User password	0 to 65535	0	☆
PP. 01	Restore default settings	0:No operation 01: Restore factory settings except motor parameters 02: Clear records	0	★
Group C0: Torque Control and Restricting Parameters				
C0.00	Speed / torque control mode selection	0 : Speed control 1 : Torque control	0	★
C0.01	Torque setting source in torque control	0 : Digital setting (C0.03) 1 : FIV/Keyboard Potentiometer 2 : FIC/AVI 3 : reserved 4 : PULSE setting 5 : Communication given 6 : MIN (FIV/Keyboard Potentiometer , FIC/AVI) 7 : MAX (FIV/keyboard potentiometer , FIC/AVI) (full scale of options 1-7 , corresponding to C0.03 digital setting)	0	★
C0.03	Torque digital setting in torque control mode	-200.0% to 200.0%	150.0%	☆
C0.05	Torque control forward maximum frequency	0.00Hz ～Maximum frequency	50.00Hz	☆
C0.06	Torque control reverse maximum frequency	0.00Hz ～Maximum frequency	50.00Hz	☆
C0.07	Torque control acceleration time	0.00s ～ 650.00s	0.00s	☆
C0.08	Torque control deceleration time	0.00s ～ 650.00s	0.00s	☆
Group C1-C4: reserved				
Group C5: Control Optimization Parameters				
C5.00	DPWM switching upper limit frequency	0.00Hz ~ 15.00Hz	12.00Hz	☆

C5.01	PWM modulation method	0 : Asynchronous modulation 1 : Synchronous modulation	0	☆
C5.02	Dead zone compensation mode selection	0 : No compensation 1 : Compensation mode 1 2 : Compensation mode 2	1	☆
C5.03	Random PWM depth	0 : Random PWM is invalid 1 to 10 : PWM carrier frequency random depth	0	☆
C5.04	Rapid current limit	0 : Disable 1 : enable	1	☆
C5.05	Current detection compensation	0 to 100	5	☆
C5.06	Undervoltage threshold	60.0% to 140.0%	9 0.0%	☆
C5.07	SFVC optimization mode selection	0 :No optimization 1 : Optimization mode 1 2 : Optimization mode 2	1	☆
Group C6: Fl Curve Setting (Fl is FIV or FIC)				
C6.00	F I Curve 4 Minimum Input	0.00V to C6.02	0.00V	☆
C6.01	F I curve 4 minimum input corresponding setting	-100.0% to +100.0%	0.0%	☆
C6.02	F I curve 4 inflection point 1 input	C6.00 to C6.04	3.00V	☆
C6.03	F I curve 4 inflection point 1 input corresponding setting	-100.0% to +100.0%	30.0%	☆
C6.04	F I curve 4 inflection point 2 input	C6.02 to C6.06	6.00V	☆
C6.05	F I curve 4 inflection point 2 input corresponding setting	-100.0% to +100.0%	60.0%	☆
C6.06	F I Curve 4 Maximum Input	C6.06 ～ + 10.00V	10.00V	☆
C6.07	F I curve 4 maximum input corresponding setting	-100.0% to +100.0%	100.0%	☆
C6.08	F I Curve 5 Minimum Input	0.00V to C6.10	0.00V	☆
C6.09	F I curve 5 minimum input corresponding setting	-100.0% to +100.0%	-100.0%	☆
C6.10	F I curve 5 inflection point 1 input	C6.08 to C6.12	3.00V	☆

C6.11	F I curve 5 inflection point 1 input corresponding setting	-100.0% to +100.0%	-30.0%	☆
C6.12	F I curve 5 inflection point 2 input	C6.10 to C6.14	3.00V	☆
C6.13	F I curve 5 inflection point 2 input corresponding setting	-100.0% to +100.0%	30.0%	☆
C6.14	F I Curve 5 Maximum Input	C6. 12 ～ +10.00V	10.00V	☆
C6.15	F I curve 5 maximum input corresponding setting	-100.0% to +100.0%	100.0%	☆
C6.16	FIV/Keyboard potentiometer set jump point	-100.0% to 100.0%	0.0%	☆
C6.17	FIV/Keyboard potentiometer set jump amplitude	0.0% to 100.0%	0.5%	☆
C6.18	FIC/AVI set jump point	-100.0% to 100.0%	0.0%	☆
C6.19	FIC/AVI set jump amplitude	0.0% to 100.0%	0.5%	☆
Group C9 PID function increased				
C9.00	Sleep frequency PID	0~P0.12	0.00Hz	☆
C9.01	Sleep duration PID	0~5000.0S	10.0S	☆
C9.02	PID wakeup value	0~100.0%	60.0%	☆
Group CC FI/FO correction				
CC.00	FIV/Keyboard Potentiometer Measured Voltage 1	0.500V ~ 4.000V	Factory calibration	☆
CC.01	FIV/Keyboard potentiometer shows voltage 1	0.500V ~ 4.000V	Factory calibration	☆
CC.02	FIV/keyboard potentiometer measured voltage 2	6.000V ~ 9.999V	Factory calibration	☆
CC.03	FIV/Keyboard potentiometer shows voltage 2	6.000V ~ 9.999V	Factory calibration	☆
CC.04	FIC/AVI measured voltage 1	0.500V ~ 4.000V	Factory calibration	☆
CC. 05	FIC/AVI display voltage 1	0.500V ~ 4.000V	Factory calibration	☆

CC.06	FIC/AVI measured voltage 2	6.000V ~ 9.999V	Factory calibration	☆
CC.07	FIC/AVI display voltage 2	6.000V ~ 9.999V	Factory calibration	☆
CC.08	Reserved			☆
CC.09	Reserved			☆
CC.10	Reserved			☆
CC.11	Reserved			☆
CC.12	FOV target voltage 1	0.500V ~ 4.000V	Factory calibration	☆
CC.13	FOV measured voltage 1	0.500V ~ 4.000V	Factory calibration	☆
CC.14	FOV target voltage 2	6.000V ~ 9.999V	Factory calibration	☆
CC.15	FOV measured voltage 2	6.000V ~ 9.999V	Factory calibration	☆
CC.16	FOC target voltage 1	0.500V ~ 4.000V	Factory calibration	☆
CC.17	FOC measured voltage 1	0.500V ~ 4.000V	Factory calibration	☆
CC.18	FOC target voltage 2	6.000V ~ 9.999V	Factory calibration	☆
CC.19	FOC measured voltage 2	6.000V ~ 9.999V	Factory calibration	☆

Monitoring parameter summary :

Function code	Name	Unit
D0 group Basic monitoring parameters		
D 0.00	Operating frequency (Hz)	0.01Hz
D0.01	Set frequency (Hz)	0.01Hz
D0.02	Bus voltage (V)	0.1V
D0.03	Bus Voltage (V)	1V
D0.04	Output current (A)	0.01A
D0.05	Output power (kW)	0.1kW
D0.06	Output torque (%)	0.1%
D0. 07	S input state	1
D0.08	MO1 output status	1
D0.09	FIV/Keypad Potentiometer Voltage (V)	0.01V
D0.10	FIC/AVI voltage (V)	0.01V
D0.11	Reserved	
D0.12	Count value	1
D0.13	Length	1
D0.14	Load speed display	1
D0.15	PID setting	1
D0.16	PID feedback	1
D0.17	PLC stage	1

D0.18	PULSE input pulse frequency (Hz)	0.01kHz
D0.19	Reserved	
D0. 20	Remaining running time	0.1Min
D0.21	FIV/Keyboard Potentiometer Voltage Before Correction	0.001V
D0.22	FIC/AVI correction before correction	0.001V
D0.23	Reserved	
D0.24	Linear speed	1m/Min
D0.25	Current power-on time	1Min
D0.26	Current running time	0.1Min
D0. 27	PULSE input pulse frequency	1Hz
D0. 28	Communication settings value	0.01%
D0. 29	Reserved	
D0.30	Reserved	
D0.31	Auxiliary frequency Y display	0.01Hz
D0.32	View arbitrary memory address value	1
D0.33	Reserved	
D0.34	Motor temperature	1℃
D0.35	Target torque (%)	0.1%
D0.36	Reserved	
D0.37	Power factor angle	0.1
D0.38	Reserved	
D0.39	VF separation target voltage	1V
D0.40	Output voltage upon VF separation	1V
D0.41	Reserved	
D0.42	Reserved	
D0.43	Reserved	
D0.44	Reserved	
D0.45	Current fault code	0

Fault code table:

Error code	Name	Error code	Name
OC1	Acceleration overcurrent	RAY	Contactor failure
OC2	deceleration overcurrent	IE	Current detection failure
OC3	Constant speed overcurrent	TE	Motor self-learning fault
OU1	Accelerating overvoltage	EEP	EEPROM read and write failure
OU2	deceleration overvoltage	GND	Short to ground fault
OU3	Constant speed overvoltage	END1	Cumulative running time reached fault
POF	control power failure	END2	The cumulative power-on time reaches

			the fault
LU	Undervoltage fault	LOAD	load drop failure
OL2	Inverter overload	PIDE	PID feedback loss fault during runtime
OL1	Motor overload	CBC	Fast current limit fault
LI	input phase loss	ESP	Excessive speed deviation fault
LO	output phase loss	OSP	Motor overspeed fault
OH	Module overheating	CE	communication fail
EF	External device failure		

Note: Product parameters, please refer to the actual product, the content is subject to change without prior notice.

Appendix 1 : PD2000 Modbus Communication Protocol

PD2000 series inverter provides RS485 communication interface and supports Modbus communication protocol. Users can calculate The computer or PLC realizes centralized control. Through this communication protocol, the inverter operation command is set, the function code parameters are modified or read, and the working status and fault information of the inverter are read.

1. Contents of the agreement

The serial communication protocol defines the content and format of information transmitted in serial communication. These include: host polling (or broadcast broadcast) format; the encoding method of the host, including: function code required for action, transmission data and error checking, etc. Slave sound It should also use the same structure, including: action confirmation, return data and error checking, etc. If the slave is receiving information If an error occurs, or the action requested by the host cannot be completed, it will organize a fault message as a response to feedback to the host.

2. Application method

inverter is connected to the " single master and multiple slave " PC/PLC control network with RS485 bus .

3. The bus structure

(1) interface

RS485 hardware interface

(2) transfer method Asynchronous serial, half-duplex transmission mode. At the same time, only one of the master and slave can send data and the other can only receive data. In the process of serial asynchronous communication, data is sent frame by frame in the form of messages.

(3) Topology Single master multi-slave system. The setting range of the slave address is 1~247 , and 0 is the broadcast communication address. Slave addresses in the network must be unique.

4. Description of the agreement

PD2000 series inverter communication protocol is an asynchronous serial master-slave Modbus communication protocol. There is only one device in the network. The standby (host) is able to establish a protocol (called a " query / command "). Other devices (slaves) can only respond to the master by providing data The " query / command " of the host computer, or the corresponding action is made according to the " query / command " of the host computer. The host here refers to personal computer (PC), industrial control equipment or programmable logic controller (PLC), etc., and the slave refers to PD2000 inverter. The master can not only communicate with a certain slave, but also publish broadcast information to all the lower slaves. For the " inquiry / command " of the host that is accessed individually , the slave must return a message (called a response), and for the broadcast information sent by the host, the slave does not need to send back a response to the host.

5.Communication data structure

Modbus protocol communication data format of PD2000 series inverter is as follows: Using RTU mode, message transmission starts with a pause interval of at least 3.5 character times.

Waves in the network Variety of character times at the bit rate, which is the easiest to achieve. The first field of the transfer is the device address.

0...9,A...F in hexadecimal . The network device continuously detects the network bus, including the pause interval. When the first field (address field) is received, each device decodes it to determine whether it is destined for its own. After the last transmitted character, a pause of at least 3.5 character times marks the end of the message. A new message is available after this pause start.

The entire message frame must be transmitted as a continuous stream. If there is a pause of more than 1.5 character times before the frame is complete , The receiving device will flush the incomplete message and assume that the next byte is the address field of a new message. Likewise, if a new message Beginning with the previous message in less than 3.5 characters, the receiving device will consider it to be a continuation of the previous message. this will lead to An error because the value in the final CRC field cannot be correct.

RTU frame format:

frame header	3.5 character time
Slave address	Mailing address: 1~247
Command	03 : Read slave parameters; 06 : Write slave
Data content	Data content: Function code parameter address, function code parameter number, function code parameter value, etc.
Data content	
...	
Data content	
CRC CHK	Detection value: CRC value.
CRC CHK	
END	3.5 character time

CMD (command command) and DATA (data word description)

Command code: 03H , read N words (Word) (up to 12 words can be read) For example: frequency conversion with slave address 01 The start address of the device F1 0 5 continuously reads 2 consecutive values

host command information

ADR	01H
CMD	03H
Start address high order	F1 H
start address low	05 H
Register number high bit	00H
Register count low	02H
CRC CHK low order	CRC CHK value to be calculated
CRC CHK high bits	

Slave response information

PD. 05 is set to 0 :

ADR	01H
CMD	03H
high byte count	00H
low byte count	04H
Data F002H High	00H
Data F002H low	00H
Data F003H High	00H
Data F003H High	01H
CRC CHK low order	CRC CHK value to be calculated
CRC CHK high bits	

When PD. 05 is set to 1

ADR	01H
CMD	03H
number of bytes	04H
Data F002H High	00H
Data F002H low	00H
Data F003H High	00H
Data F003H low	01H
CRC CHK low order	CRC CHK value to be calculated
CRC CHK high bits	

Command code: 06H Write a word (Word) For example: write 3 000 (BB 8H) to the address F00AH of the inverter at slave address 05H .

host command information

ADR	0 5 H
CMD	06H
Data address high order	F0H
Data address low order	0AH
High level of data content	0B H
data content low	B8H
CRC CHK low order	CRC CHK value to be calculated
CRC CHK high bits	

Slave response information

ADR	02H
CMD	06H
Data address high order	F0H
Data address low order	0AH
High level of data content	13H
data content low	88H
CRC CHK low order	CRC CHK value to be calculated
CRC CHK high bits	

Check method - CRC check method: CRC (Cyclical Redundancy Check) uses R TU frame format, message Error detection fields based on CRC methods are included. The CRC field detects the content of the entire message. The CRC field is two bytes containing a 16 -bit binary value. It is calculated by the transmitting device and added to the message. The receiving device recalculates the CRC of the received message , and Compared with the value in the received CRC field, if the two CRC values are not equal, there is an error in the transmission.

The CRC is stored in 0xFFFF first , and then a process is called to convert the consecutive 8 -bit bytes in the message with the value in the current register. line processing. Only the 8Bit data in each character is valid for CRC , and the start and stop bits and parity bits are invalid.

In the process of CRC generation, each 8 -bit character is (XOR) with the contents of the register individually, and the result goes to the least significant bit. Shift to, the most significant bit is filled with 0 . The LSB is extracted and detected, if the LSB is 1 , the register alone is different from the preset value Or, if LSB is 0 , do not proceed. The whole process is repeated 8 times. After the last bit (8th bit) is completed, the next 8 -bit byte is XOR with the current value of the register independently. The value in the final register is the CRC value after all bytes in the message are executed .

CRC is added to the message, the low byte is added first, then the high byte. The CRC simple function is as follows:

```
unsigned int crc_cal_value(unsigned char *data_value,unsigned char data_length)
{
int i;
unsigned int crc_value=0xffff;
while(data_length--)
{
crc_value^=*data_value++;
for(i=0;i<8;i++)
{
If(crc_value&0x0001)
crc_value=(crc_value>>1)^0xa001;
else
crc_value=crc_value>>1;
}
}
Return(crc_value);
}
```

Address Definition of Communication Parameters

This part is the content of communication, which is used to control the operation of the inverter, the status of the inverter and the setting of related parameters. Read and write function code parameters (some function codes cannot be changed, and are only used by manufacturers or monitored): Function code parameter address marking rules:

The rules are represented by the function code group number and label as the parameter address:

High order byte: F 0~ F F (Group P), A 0~ A F (Group C), 70~7F (Group D) Low byte: 00~FF

Such as: P3.12 , the address is F30C ; Notice: PF group : neither can read parameters nor change parameters; Group D : can only be read, parameters cannot be changed.

Some parameters cannot be changed when the inverter is running; some parameters cannot be changed no matter what state the inverter is in. Change; change function code parameters, but also pay attention to the range, unit, and related descriptions of the parameters.

In addition, since the EEPROM is frequently stored, the service life of the EEPROM will be reduced . Therefore, some function codes are In the mode, no need to store, just change the value in RAM .

If it is a parameter of group P , to realize this function, it can be realized only by changing the high-order F of the function code address to 0 . If it is a parameter of group C , to realize this function, just change the high-order A of the function code address to 4 and it can be realized. The corresponding function code addresses are as follows: High byte: 00~0F (Group P), 40~4F (Group C) Low byte: 00~FF

Such as: the function code P3.12 is not stored in the EEPROM , and the address is expressed as 030C ; The function code C0.05 is not stored in the EEPROM , and the address is expressed as 4005 ; This address indicates that it can only be used for writing to RAM , but not for reading. When reading, it is an invalid address.

Stop / Run parameter section:

Parameter address	Parameter Description
1000	Communication setting value (-10000~10000)
1001	operating frequency
1002	bus voltage
1003	The output voltage
1004	Output current
1005	Output Power
1006	output torque
1007	running speed
1008	S input flag
1009	MO1 output flag
100A	FIV/Keypad Potentiometer Voltage
100B	FIC/AVI voltage
100C	reserve
100D	count value input
100E	length value input
100F	load speed
1010	PID settings
1011	PID feedback
1012	PLC steps
1013	PULSE input pulse frequency, unit 0.01kHz
1014	reserve
1015	remaining running time
1016	FIV/Keyboard Potentiometer Voltage Before
1017	FIC/AVI correction
1018	reserve

1019	Line speed
101A	Current power-on time
101B	current running time
101C	PULSE input pulse frequency, unit 1Hz
101D	Communication settings
101E	reserve
101F	Main frequency X display
1020	Auxiliary frequency Y display

**** Note:**

The communication setting value is a percentage of the relative value, 10000 corresponds to 100.00% , -10000 corresponds to -100.00% . For frequency-dimensional data, the percentage is relative to the maximum frequency (P0.12) ; for torque - dimensional data , the percentage is P3.10 .

Control command input to inverter: (write only)

command word address	Command function
2000	0001 : Forward running
	0002 : Reverse operation
	0003 : Forward jog
	0004 : reverse jog
	0005 : Free stop
	0006 : Decelerate to stop
	0007 : Fault reset

Read drive status: (read only)

Status word address	Status word function
3000	0001 : Forward running
	0002 : Reverse operation
	0003 : shutdown

Parameter lock password verification: (if the return is 8888H , it means the password verification is passed)

password address	Enter the content of the password
1F00	*****

command address	Command content
2001	BIT0 : (reserved)
	BIT1 : (reserved)
	BIT2 : RA-RB-RC output control
	BIT3 : reserved
	BIT4 : MO1 output control

Analog Output FOV Control: (write only)

command address	Command content
2002	0 ～ 7FFF means 0 %～ 100 %

Analog Output FOC Control: (write only)

command address	Command content
2003	0 ～ 7FFF means 0 %～ 100 %

Pulse (PULSE) output control: (write only)

command address	Command content
2004	0 ～ 7FFF means 0 %～ 100 %

Inverter fault description:

Inverter fault address	Inverter fault information
8000	0000 : No fault 0001 : Inverter unit protection 0002 : Acceleration overcurrent 0003 : Deceleration overcurrent 0004 : Constant speed overcurrent 0005 : Acceleration overvoltage 0006 : Deceleration overvoltage 0007 : Constant speed overvoltage 0008 : Control power failure 0009 : Undervoltage fault 000A : Inverter overload 000B : Motor overload 000C : reserved 000D : Output phase loss 000E : Module overheated 000F : External fault 0010 : Communication error 0011 : Contactor abnormal 0012 : Current detection fault 0013 : Motor self-learning fault 0014 : reserved 0015 : Parameter read and write exception 0016 : Inverter hardware failure 0017 : Motor short circuit fault to ground 0018 : reserved 0019 : reserved 001A : Running time reached 001B: Reserved 001C: Reserved

Communication fault address	Fault function description
8001	0000 : No fault 0001 : wrong password 0002 : Command code error 0003 : CRC check error 0004 : Invalid address 0005 : Invalid parameter 0006 : Invalid parameter change 0007 : The system is locked 0008 : EEPROM operation is in progress

P D group communication parameter description

PD. 00	baud rate	Factory default	0005
	Predetermined area	place: MODUBS baud rate 0 : 300BPS 1 : 600BPS 2 : 1200BPS 3 : 2400BPS 4 : 4800BPS 5 : 9600BPS 6 : 19200BPS 7 : 38400BPS 8 : 57600BPS 9 : 115200BPS	

This parameter is used to set the data transmission rate between the host computer and the inverter. Note that the baud rate set by the host computer and the inverter must be the same, otherwise, the communication cannot be carried out. The higher the baud rate, the faster the communication speed.

PD. 01	Data Format	Factory default	0
	Predetermined area	0 : No checksum: Data format <8,N,2> 1 : Even test: data format <8,E,1> 2 : Odd parity: data format <8,O,1> 3 : No parity: data format <8 , N , 1>	

The data format set by the host computer and the inverter must be consistent, otherwise, the communication cannot be carried out.

PD. 02	local address	Factory	1
	Predetermined area	1~247 , 0 is the broadcast address	

When the local address is set to 0 , it is the broadcast address, which realizes the broadcast function of the upper computer.

The local address is unique (except the broadcast address), which is the basis for the point-to-point communication between the host computer and the inverter.

PD. 03	response delay	Factory	2ms
	Predetermined area	0~20ms	

When this function code is set to 0.0 s , the communication timeout parameter is invalid.

When the function code is set to a valid value, if the interval between one communication and the next communication exceeds the communication timeout time, the system will The system will report a communication failure error (CE). Normally, it is set to invalid. If in a system with continuous communication, By setting the secondary parameter, the communication status can be monitored.

PD. 05	Communication protocol selection	Factory default	0
	Predetermined area	0 : Non-standard Modbus protocol 1 : Standard Modbus protocol	

PD. 05=1 : select standard Modbus protocol.

PD. 05=0 : When reading the command, the number of bytes returned by the slave is one byte more than the standard Modbus protocol. For details, please refer to the " Communication Data Structure " section of this protocol.

PD.06	Communication read current resolution	Factory default	0
	Predetermined area	0 : 0.01A 1 : 0.1A	

It is used to determine the output unit of the current value when the communication reads the output current.