Power
DRIVE

PD4000 Series

Vector Control Inverter

User Manual

Thank you very much for your buying PD4000 Series Advanced Vector Control Inverter. Before use, please read this manual thoroughly to ensure proper usage. Keep this manual at an easily accessible place so that can refer anytime as necessary.

Safety Precautions

Please read this operation manual carefully before installation, operation, maintenance or inspection In this manual, the safety precautions were sorted to “WARNING" or “CAUTION".



Indicates a potentially dangerous situation which if can not avoid will result in death or serious injury.

Indicates a potentially dangerous situation which, if can not avoid will cause minor or moderate injury and damage the device. This Symbol is also used for warning any un-safety operation. In some cases, even the contents of “CAUTION" still can cause serious accident. Please follow these important precautions in any situation.

In some cases, even the contents of “CAUTION” still can cause serious accident. Please follow these important precautions in any situation.

In some cases, even the contents of "CAUTION" still can cause serious accident. Please follow these important precautions in any situation.

★NOTE indicate the necessary operation to ensure the device run properly.

Warning Marks are placed on the front cover of the inverter. Please follow these indications when using the inverter.

WARNING
· May cause injury or electric shock.
· Please follow the instructions in the manual before installation or operation.
· Disconnect all power line before opening front cover of unit. Wait at least 10 minutes until DC Bus capacitors discharge.
· Use proper grounding techniques.
· Never connect AC power to output UVW terminals.

Contents

Chapter 1 Introduction 1
1-1 The meaning of the nameplate 1
1-2 Technical characteristics 1
1-3 PD4000 installation 3
1-4 PD4000 selection guide 6
1-5 PD4000 device recommended specifications 7

Chapter 2 Wiring 8
2-1 PD4000 terminal configuration 8
2-2 PD4000 wiring diagram 9

Chapter 3 Operation 12
3-1 PD4000 keypad description 12

Chapter 4 Function parameters 15

Appendix 1 Troubleshooting 43

Appendix 2 Communication protocol 52

Chapter 1 Introduction

1-1 The meaning of the nameplate



PD4000:PD 4000 series inverter

-3: 3HP(2.2kW) -5 means 5HP(3.7kW)

-33: 380V 3PH -12: 220V 1PH -34: 440V 3PH -32: 220V 3PH

1-2 Technical characteristics

Item		PD4000 series Inverter
Basic function	Control mode	V/F control Open loop vector control (without PG); Closed loop vector control (with PG).
	Maximum frequency	0.00-600.00Hz.
	Carrier frequency	0.5kHz~16kHz The carrier frequency is automatically adjusted based on the load features.
	Input frequency resolution	Digital setting:0.01Hz Analog setting: Maximum frequency 0.025%
	Start torque	G-type:0.5Hz/150% (no PG); P-type :0.5Hz/100%
	Speed range	1:100(No PG)
	Speed stability accuracy	±0.5%(No PG)
Basic function	Overload capacity	G Type:60s for 150% of the rated current, 3s for 180% of the rated current. P Type:60s for 120% of the rated current, 3s for 150% of the rated current.
	Torque boost	Auto-boost ; Customized boost:0.1%~30.0%.
	VF curve	Straight-line VF curve; Multi-point VF curve; N-power VF curve (1.2 power, 1.4 power, 1.6 power, 1.8 power, 2 power)
	VF separation	2 types: complete separation; half separation.
	Ramp Mode	Linear or S-curve acceleration and deceleration mode. Four kinds of acceleration and deceleration time, acceleration and deceleration time range 0.0~65000s.
	DC braking	Dc braking frequency :0.00Hz~ maximum frequency; Braking interval :0.0s~36.0s ; Braking action current value :0.0%~100.0%

	JOG control	Jog frequency range：0~50Hz Jog acceleration/deceleration time：0-6500s
	Simple PLC; Multi-speed operation	Up to 16 segment speeds are possible with built-in PLC or control terminals.
	Built-in PID	It is convenient to realize the closed-loop control system of process control.
	Automatic Voltage Regulation (AVR)	When the grid voltage changes, it can automatically keep the output voltage constant.
	Overvoltage and overcurrent stall control	Automatic current and voltage limit during operation to prevent frequent overvoltage skipping.
	Rapid current limiting function	Minimize the overcurrent fault and protect the normal operation of the inverter.
	Torque limit and control	Automatic torque limit during operation to prevent frequent overcurrent tripping; The closed-loop vector mode(FVC) enables torque control.
Characteristic function	Excellent performance	The control of asynchronous motor is realized with high performance current vector control technology.
	Instant stop non-stop function	The load feedback energy is used to compensate the voltage reduction in the transient power failure, and the inverter can continue to run for a short time.
	Rapid current limit	It helps to avoid frequent over current faults of the AC drive.
	Timing control	Timing range:00Min-6500.0Min.
	Communication	Modbus RS485； Optional Profinet communication (Optional communication card).
	Safe Torque Off(STO function)	Below 10HP use 10HP inverter housing.
	Supports a variety of PG cards	Support for differential input PG card, resolver PG card, rotating transformer PG card and so on.
Running	Command source	Operation panel, control terminal, serial communication port. Users can switch in a variety of ways.
	Frequency source	10 frequency sources: digital set, analog voltage set, analog current set, pulse set, serial port set. Users can switch in a variety of ways.
	Auxiliary frequency source	10 auxiliary frequency sources. Users can flexibly realize auxiliary frequency fine-tuning and frequency synthesis.
	Input terminal	Standard :4(1PH 220V 0.4kW-2.2kW-VF control) / 5(1PH 220V 0.4kW-3.7kW-vector control /3PH 380V 0.4kW-5.5kW vector control) / 6(7.5kW or more) digital input terminals, The S3 supports high-speed pulse input up to 100kHz; 1 (below 5.5KW) / 2 (above 7.5KW) analog input terminals, 1 support 0-10V voltage input, 1 (above 7.5KW) support 0-10V voltage input or 4-20mA current input.
	Output terminal	1 high-speed pulse output and collector output terminals (1PH 220V

		0.4KW-2.2KW-VF control is not supported); 1(below 5.5KW)/2(above 7.5KW) relay output terminal; 1(1PH 220V 0.4kW-3.7kw-vector /3PH 380V 0.4KW-5.5KW vector)/ 2(7.5KW or more) mode output terminal, support 4~20mA current output or 0~10V voltage output.
Protection	Protection function	Short-circuit detection, input and output phase loss protection, overcurrent protection, overvoltage protection, undervoltage protection, overheat protection, overload protection, etc.
	LED display	Good display of parameters（LCD is available separately buy）
	Key locking and function selection	It can lock the keys partially or completely and define the function range of some keys so as to prevent mal-function.
Environment	Installation location	Indoor, free from direct sunlight, dust, corrosive gas, combustible gas, oil smoke, vapor, drip or salt.
	Altitude	<1000m
	Ambient temperature	-10°C ~+ 40°C (de-rated if the ambient temperature is between 40°C ~50°C)
	Humidity	Less than 95%RH, without condensing
	Vibration	Less than 5.9m/s² （0.6g）
	Storage temperature	-20~+60℃

1-3 PD4000 installation

SIZE A

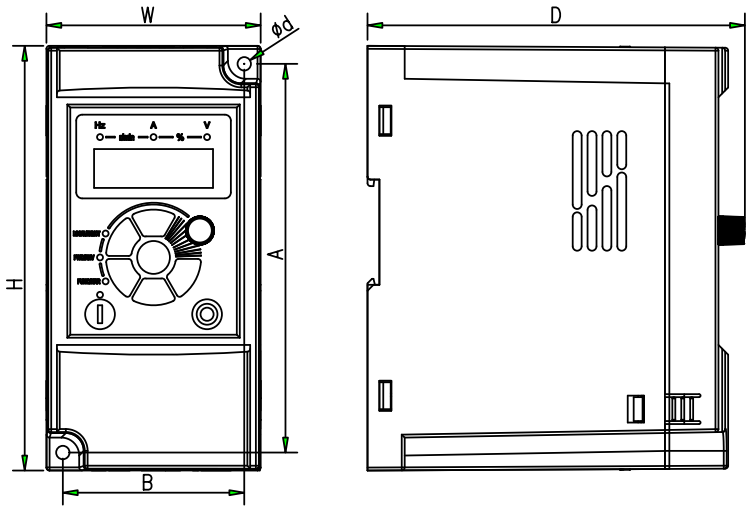

SIZE B

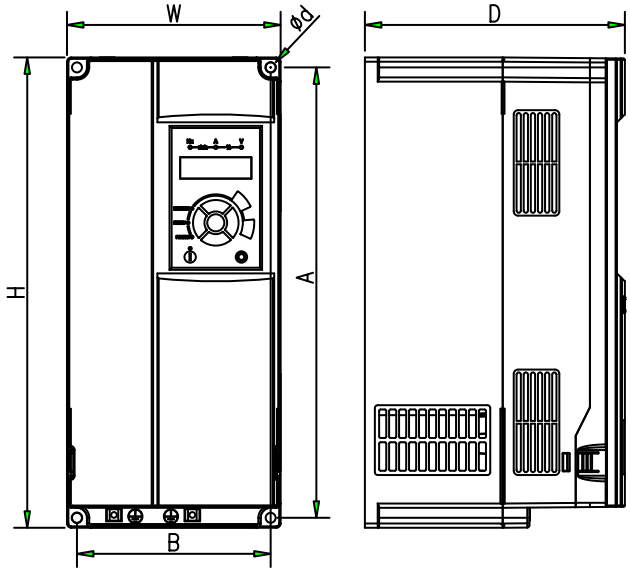

SIZE	Model	W	H	D	A	B	Φd
A	PD4000-0.5-12	72	142	127	130	61	4.5
	PD4000-1-12						
	PD4000-2-12						
	PD4000-0.5-33						
	PD4000-1-33						
	PD4000-2-33						
	PD4000-3-33						
	PD4000-3-12	85	180	131	167	72	5.5
	PD4000-5-12						
	PD4000-5-33						
	PD4000-7-33						
B	PD4000-10-33	106	240	168	230	96	4.5
	PD4000-15-33						
	PD4000-10-12	151	332	183	318	137	7
	PD4000-20-33						
	PD4000-25-33						
	PD4000-30-33						
	PD4000-40-33	217	400	216	385	202	7
	PD4000-50-33						

Note: 220v 3ph frequency inverter size, such as PD4000-1-32 (1HP/0.75KW 220v 3ph) size, reference 380v, and power *2 size， is PD4000-2-33(2HP/1.5KW 380v 3ph) size. Other power is calculated in the same way. For the size of 440v, refer to the size of 380v.

SIZE C

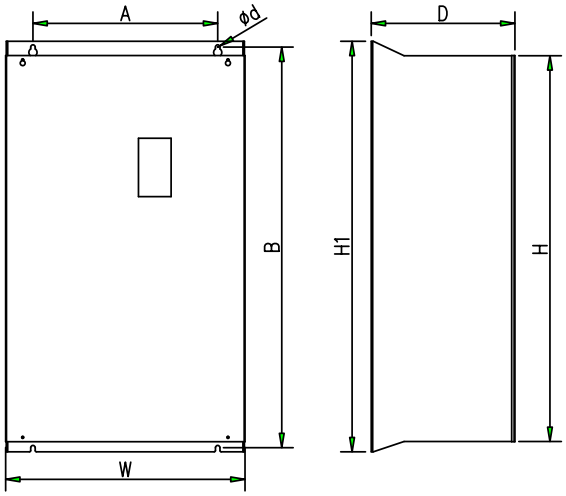

SIZE	Model	W	H	H1	D	A	B	B	Φd
C	PD4000-60-33	300	440	470	240	200	455	455	9
	PD4000-75-33								
	PD4000-100-33	275	590	630	310	200	612	612	9
	PD4000-122-33								
	PD4000-150-33								
	PD4000-180-33	400	675	715	310	320	695	695	11
	PD4000-220-33								

SIZE D

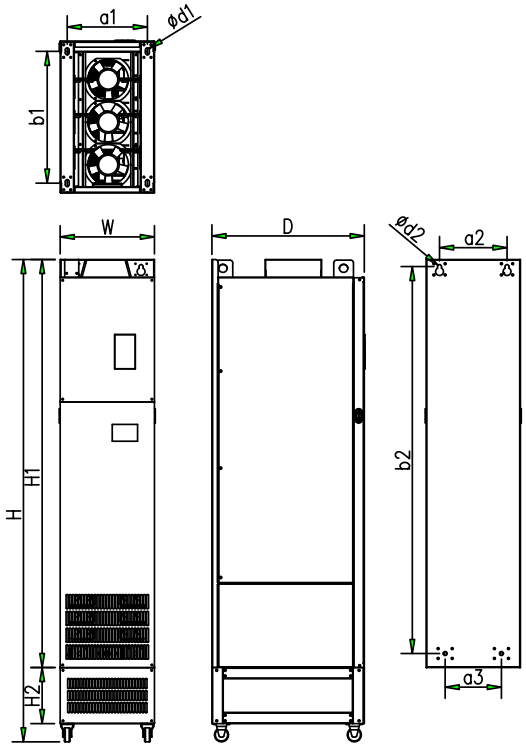

Size	Model	Outline dimension(mm)					Installation size(mm)			Wall-mounted size(mm)			
		W	H	H1	H2	D	a1	b1	d1	a2	a3	b2	d2
D	PD4000-250-33	300	1445	1180	200	500	250	430	14	220	150	1135	13
	PD4000-270-33												
	PD4000-300-33												
	PD4000-340-33	330	1595	1330	200	545	280	475	14	220	185	1275	13
	PD4000-380-33	325	1495	1230	200	545	275	470	14	220	185	1175	14
	PD4000-430-33												
	PD4000-475-33	335	1720	1455	200	545	285	470	14	220	200	1380	14
	PD4000-545-33												
	PD4000-612-33												

1-4 PD4000 selection guide

Model	Rated output power (kW)	Rated input current (A)	Rated output current (A)	Motor Power (kW)
Input voltage（v)： 1PH AC 220V±15%				
PD4000-0.5-12	0.4	5.4	2.13	0.4
PD4000-1-12	0.75	7.2	4	0.75
PD4000-2-12	1.5	10	7	1.5
PD4000-3-12	2.2	16	9.6	2.2
PD4000-5-12	3.7	17	17	3.7
PD4000-7-12	5.5	26	25	5.5
PD4000-10-12	7.5	35	32	7.5
Input voltage（v)： 3PH AC 380V±15%				
PD4000-0.5-33	0.4	3.4	1.51	0.4
PD4000-1-33	0.75	3.8	2.1	0.75
PD4000-2-33	1.5	5	3.8	1.5
PD4000-3-33	2.2	5.8	5.1	2.2
PD4000-5-33	3.7/5.5	10/15	9/13	3.7/5.5
PD4000-7-33	5.5/7.5	15/20	13/17	5.5/7.5
PD4000-10-33	7.5/11	20/26	17/25	7.5/11
PD4000-15-33	11/15	26/35	25/32	11/15
PD4000-20-33	15/18.5	35/38	32/37	15/18.5
PD4000-25-33	18.5/22	38/46	37/45	18.5/22
PD4000-30-33	22/30	46/62	45/60	22/30
PD4000-40-33	30/37	62Z76	60/75	30/37
PD4000-50-33	37/45	76/90	75/90	37/45
PD4000-60-33	45/55	92/113	90/110	45/55
PD4000-75-33	55	113	110	55
PD4000-100-33	75/90	157/180	152/176	75/90
PD4000-122-33	90/110	180/214	176/210	90/110

PD4000-150-33	110/132	214/256	210/253	110/132
PD4000-180-33	132/160	256/307	253/304	132/160
PD4000-220-33	160/185	307/355	304/340	160/185
PD4000-250-33	185/200	355/385	340/380	185/200
PD4000-270-33	200/220	385/430	380/426	200/220
PD4000-300-33	220/250	430/475	426/465	220/250
PD4000-340-33	250/280	475/525	465/520	250/280
PD4000-380-33	280/315	525/610	520/585	280/315
PD4000-430-33	315/350	610/665	585/650	315/350
PD4000-475-33	350/400	665/730	650/725	350/400
PD4000-545-33	400/450	730/825	725/820	400/450
PD4000-612-33	450/500	825/865	820/860	450/500

1-5 PD4000 device recommended specifications

Model	Motor output(kw)	Main circuit cable type(m m^2)	Breaker selection(A)	Input side magnetic contractor（A）
1PH 220V 50/60HZ				
PD4000-0.5-12	0.4	0.75	10	9
PD4000-1-12	0.75	0.75	16	12
PD4000-2-12	1.5	1.5	25	18
PD4000-3-12	2.2	2.5	32	25
PD4000-5-12	3.7	2.5	40	32
PD4000-7-12	5.5	4	40	32
PD4000-10-12	7.5	6	50	38
3PH 380V 50/60HZ				
PD4000-0.5-33	0.4	0.75	6	9
PD4000-1-33	0.75	0.75	6	9
PD4000-2-33	1.5	0.75	10	9
PD4000-3-33	2.2	0.75	10	9
PD4000-5-33	3.7/5.5	1.5	16	12
PD4000-7-33	5.5/7.5	2.5	20	18
PD4000-10-33	7.5/11	4	32	25
PD4000-15-33	11/15	4	40	32
PD4000-20-33	15/18.5	6	50	38
PD4000-25-33	18.5/22	10	80	65
PD4000-30-33	22/30	10	80	65
PD4000-40-33	30/37	16	100	65
PD4000-50-33	37/45	25	100	80
PD4000-60-33	45/55	35	160	95
PD4000-75-33	55	50	160	115
PD4000-100-33	75/90	70	250	150

PD4000-122-33	90/110	95	250	170
PD4000-150-33	110/132	120	400	205
PD4000-180-33	132/160	150	400	245
PD4000-220-33	160/185	185	400	300
PD4000-250-33	185/200	185	500	410
PD4000-270-33	200/220	185	500	410
PD4000-300-33	220/250	240	630	410
PD4000-340-33	250/280	240	630	475
PD4000-380-33	280/315	150*2	700	620
PD4000-430-33	315/350	185*2	800	620
PD4000-475-33	350/400	185*2	800	620
PD4000-545-33	400/450	240*2	1000	800
PD4000-612-33	450/500	240*2	1000	800

Chapter 2 Wiring

2-1 PD4000 terminal configuration

1. 1PH/220V 0.5HP~5HP＆3PH/380V 0.5HP~7HP (vector control)

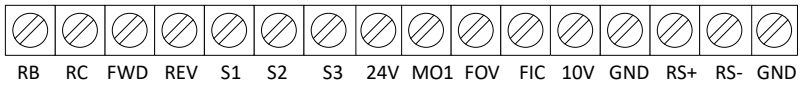

Note: S3 terminal only supports NPN function, while other FWD, REV, S1, S2 can support PNP and NPN function.

2. 220V/7HP~10HP＆380V/10HP above

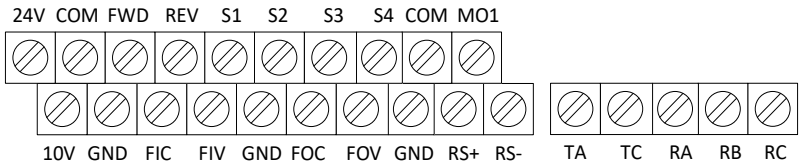

3. Air compressors application special terminal



2-2 PD4000 wiring diagram

1PH/220V 0.5HP-5HP&3PH/380V 0.5HP-7HP (vector control)

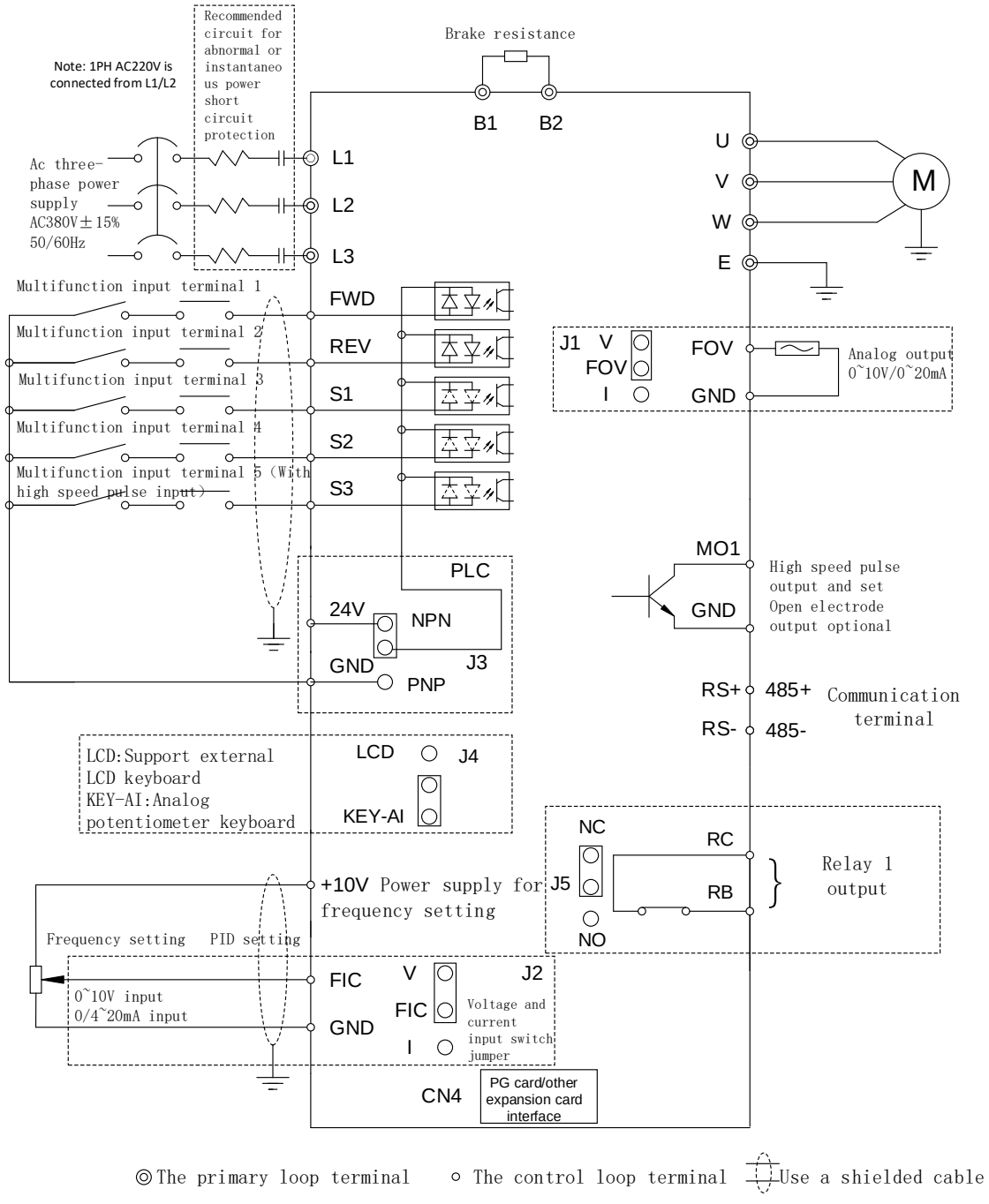

*440V circuit diagram refer to 380V； Note: Only the B1 and B2 terminals above 220V 3HP and 380V 5HP are supported.

220V/7HP~10HP＆380V/10HP~220HP

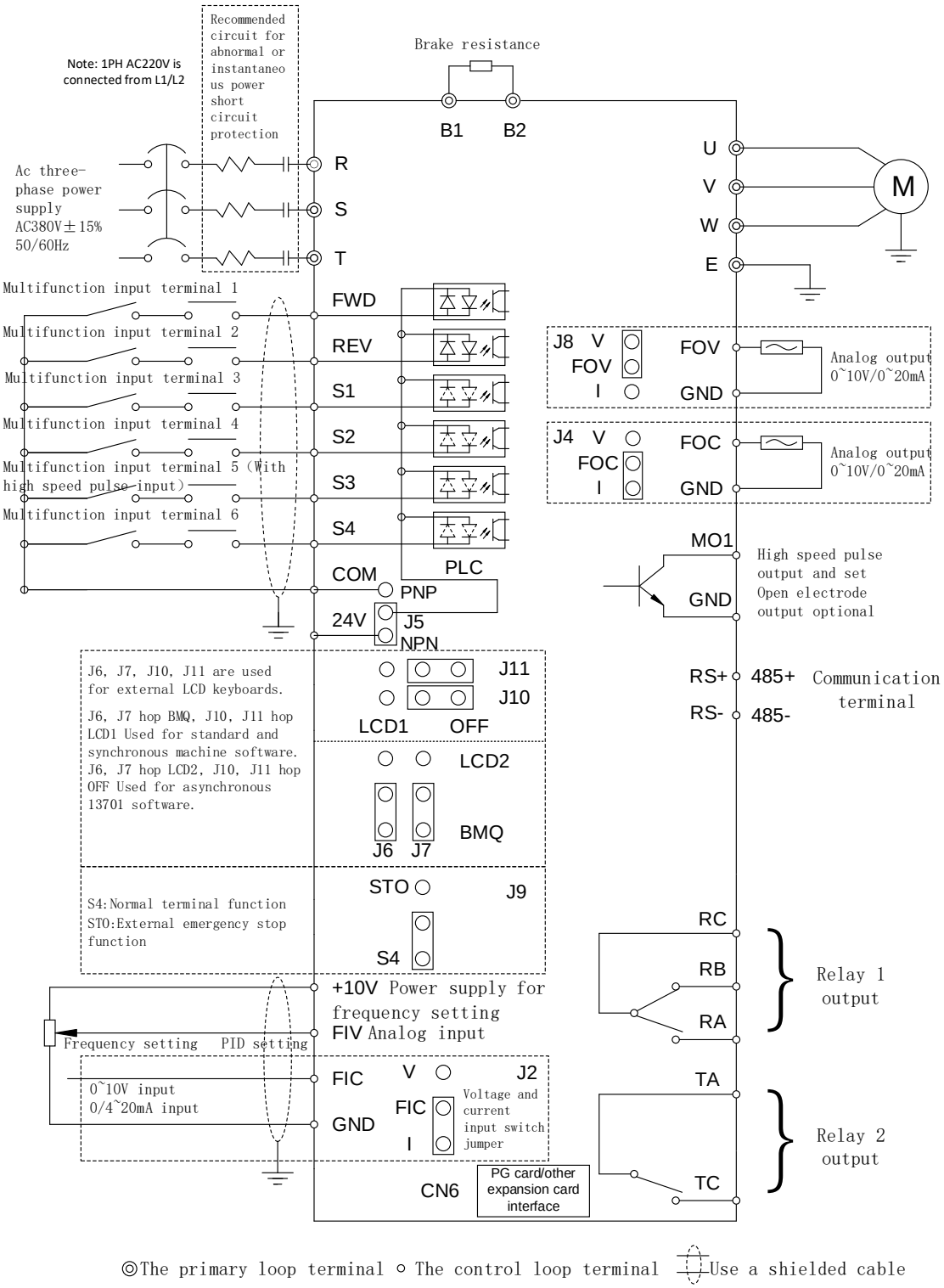

Note:220V/ 7HP~10HP &380V/ 10HP-50HP standard built-in braking unit,60HP-220HP braking unit optional.

*440V circuit diagram refer to 380V

380V/250HP~612HP

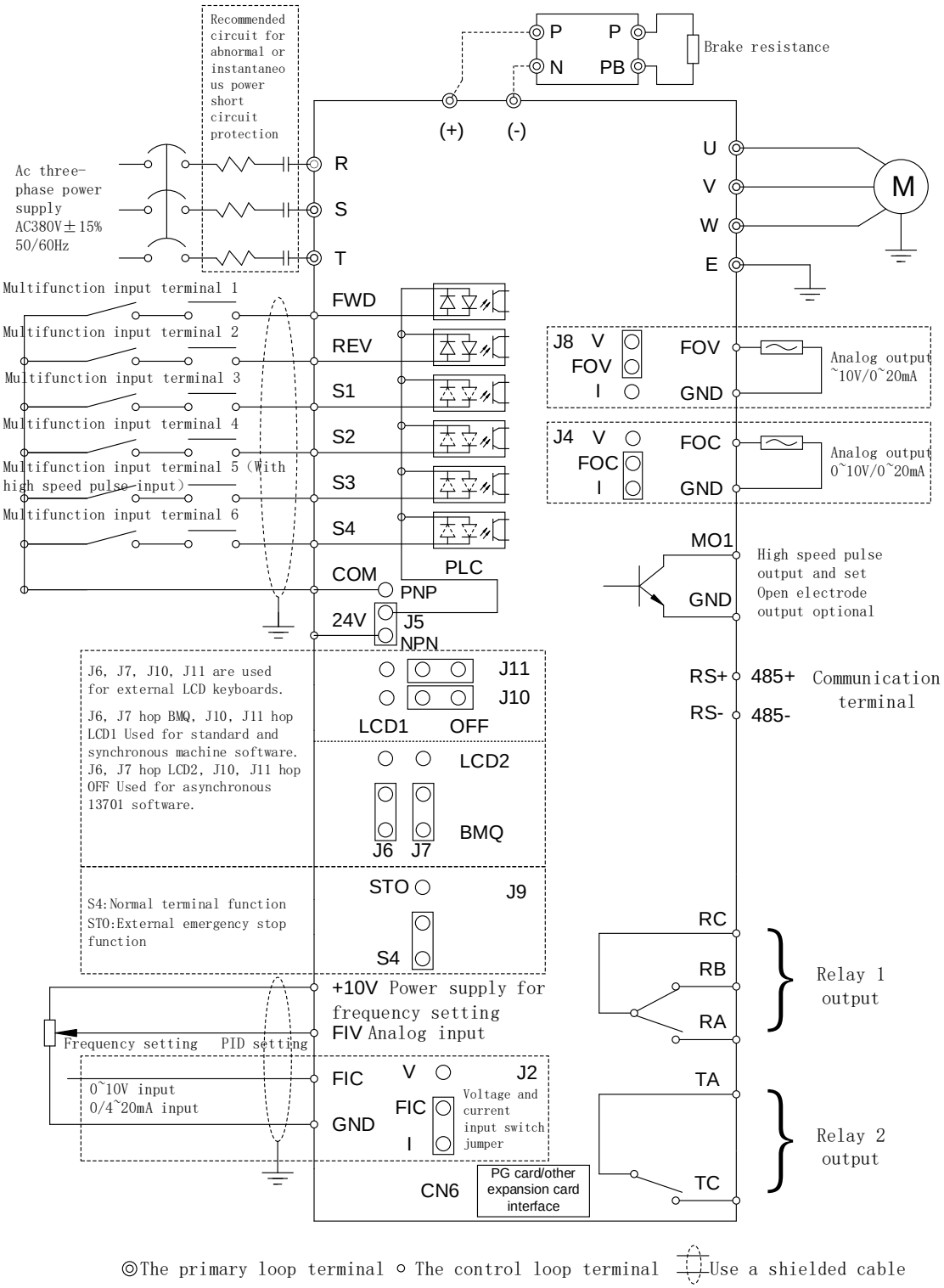

◎The primary loop terminal ○ The control loop terminal Use a shielded cable

*440V circuit diagram refer to 380V

Chapter 3 Operation

3-1 PD4000 keypad description

0.5HP~7HP





10HP~612HP





Note：The digital keyboard is removable for models up to and including 7HP

The 10HP~612HP keyboard is not removable, but customers can purchase an external keyboard separately

PD4000 function key description

Key	Name	Description
PRG	Programming key	Entry or escape of first-level menu
ENTER	Data enter key	Progressively enter menu and confirm parameters
▲	UP Increment Key	Progressively increase data or function codes
▼	DOWN Decrement key	Progressively decrease data or function codes
▶	Shift key	In parameter setting mode, press this button to select the bit to be modified. In stop and running display modes, cyclically displays parameters by shift key
	Run key	Start to run the inverter in keypad control mode
	Stop/Fault reset key	In running status, restricted by P7.02, can be used to stop the inverter. When fault alarm, can be used to reset the inverter without any restriction.
JOG	Shortcut key	Determined by function code P7.01 0：No function 1：Switchover between operation panel command and remote operation command. It indicates the switchover between the current command source and operation panel control （local operation）. If the current command source is operation panel control, the key is invalid. 2：Switch between forward and reverse, it only valid when command source is operation panel channel. 3：Forward JOG 4：Reverse JOG
M	No function	

Indicator light description

Indicator light name	Indicator light description
Hz	Frequency unit
A	Current unit
V	Voltage unit
FWD/REV	Extinguished：Forward operation Light on：Reverse operation
LOCAL/REMOT	Extinguished: Local operation Flickering: Terminal operation Light on: Communication control
FUNC/ERR	Extinguished: Running state Flickering: Pre-alarm of overload

	Light on: Fault
	Extinguished: Stop mode Flickering: In the process of auto-tuning Light on: Running mode

Chapter 4 Function parameters

If PP-00 is set to a non-zero number, parameter protection is enabled. You must enter the correct user password to enter the menu. To cancel the password protection function, enter with password and set PP-00 to 0.

Parameters menu the user customizes are not protected by password. Group P is the basic function parameters, Group D is to monitor the function parameters. The symbols in the function code table are described as follows:

"☆": The parameter can be modified when the AC drive is in either stop or running state.

"★": The parameter cannot be modified when the AC drive is in the running state.

"●": The parameter is the actually measured value and cannot be modified.

"*": The parameter is factory parameter and can be set only by the manufacturer.

Standard Function Parameters：

Function code	Parameter Name	Setting range	Default	Property
Group P0 Standard Function Parameters				
P0.00	G/P type display	1：G type（Constant torque load） 2：P type（variable torque load e.g. fan and pump）	Model dependent	●
P0.01	Control mode selection	0：No PG (speed sensor) vector control 1：With PG (speed sensor) vector control 2：V/F control	2	★
P0.02	Command source selection	0：Operation panel control (LED off) 1：Terminal control (LED on) 2：Communication control (LED linking)	0	☆
P0.03	Main frequency source X selection	0：Digital setting（P0.08 preset frequency, can modify the UP/DOWN, power lost don't memory） 1：Digital setting（P0.08，preset frequency, can modify the UP/DOWN, power lost memory） 2：FIV(above 7.5KW) 3：FIC 4：Potentiometer on operation panel（below 5.5KW） 5：PULSE （S3，Above 3.7KW） 6：Multistage instruction 7：Simple PLC	0	★

		8：PID 9：Communication setting		
P0.04	Auxiliary frequency source Y selection	The same as P0.03（frequency source X selection）	0	★
P0.05	Auxiliary frequency source superposition Y range selection	0：Relative to the maximum frequency 1：Relative to the main frequency source X	0	☆
P0.06	Auxiliary frequency source superposition Y range	0% ~ 150%	100%	☆
P0.07	Frequency source superposition selection	Unit's digit (Frequency source) 0：Main frequency source X 1：X and Y operation(operation relationship determined by ten's digit) 2：Switchover between X and Y 3：Switchover between X and "X and Y operation" 4：Switchover between Y and "X and Y operation" Ten's digit (X and Y operation) 0：X+Y 1：X-Y 2：Both the maximum 3：Both the minimum	00	☆
P0.08	Frequency preset	0.00Hz ~ maximum frequency（P0.10）	50.00Hz	☆
P0.09	Rotation direction	0：Same direction 1：Reverse direction	0	☆
P0.10	Maximum frequency	50.00Hz ~ 600.00Hz	50.00Hz	★
P0.11	Upper limit frequency source	0：P0.12 setting 1：FIV（above 7.5KW） 2：FIC 3：Reserved 4：PULSE（S3，above 3.7KW） 5：Communication setting	0	★
P0.12	Upper limit frequency	Frequency lower limit P0.14 ~ Maximum frequency P0.10	50.00Hz	☆
P0.13	Upper limit frequency offset	0.00Hz ~ Maximum frequency P0.10	0.00Hz	☆
P0.14	Frequency lower limit	0.00Hz ~ Upper limit frequency P0.12	0.00Hz	☆
P0.15	Carrier frequency	0.5kHz ~ 16.0kHz	Model	☆

			dependent	
P0.16	Carrier frequency adjustment with temperature	0：No 1：Yes	1	☆
P0.17	Acceleration time 1	0.00s ~ 65000s	Model dependent	☆
P0.18	Deceleration time 1	0.00s ~ 65000s	Model dependent	☆
P0.19	Acceleration/Deceleration time unit	0：1s 1：0.1s 2：0.01s	1	★
P0.21	Frequency offset of auxiliary frequency source for X and Y operation	0.00Hz ~ Maximum frequency P0.10	0.00Hz	☆
P0.22	Frequency instruction resolution	2：0.01Hz	2	★
P0.23	Retentive of digital setting frequency upon power	0：Not retentive 1：Retentive	1	☆
P0.25	Acceleration/Deceleration time base frequency	0：Maximum frequency（P0.10） 1：Set frequency 2：100Hz	1	★
P0.26	Base frequency for UP/DOWN modification during running	0：Running frequency 1：Set frequency	0	★
P0.27	Binding command source to frequency source	Unit's digit: Binding operation panel command to frequency source 0: No binding 1：Frequency source by digital setting 2：FIV（above 7.5KW） 3：FIC 4：Reserved 5：PULSE（S3，above 3.7KW） 6: Multi-Reference 7: Simple PLC 8: PID 9: Communication setting Ten's digit: Binding terminal command to frequency source Hundred's digit: Binding communication command to frequency source	0000	☆
Group P1 Motor parameter				
P1.00	Motor type selection	0：Common asynchronous motor 1：Variable frequency asynchronous	0	★

		motor		
P1.01	Rated motor power	0.1kW ~ 1000.0kW	Motor dependent	★
P1.02	Rated motor voltage	1V ~ 2000V	Motor dependent	★
P1.03	Rated motor current	0.01A ~ 655.35A （AC drive power <=55kW） 0.1A ~ 6553.5A （AC drive power >55kW）	Motor dependent	★
P1.04	Rated motor frequency	0.01Hz ~ maximum frequency	Motor dependent	★
P1.05	Rated motor rotational speed	1rpm ~ 65535rpm	Motor dependent	★
P1.06	Stator resistance (asynchronous motor)	0.001Ω ~ 65.535Ω （AC drive power <=55kW） 0.0001Ω ~ 6.5535Ω （AC drive power >55kW）	Tuned parameter	★
P1.07	Rotor resistance (asynchronous motor)	0.001Ω ~ 65.535Ω （AC drive power <=55kW） 0.0001Ω ~ 6.5535Ω （AC drive power >55kW）	Tuned parameter	★
P1.08	Leakage inductive reactance (asynchronous motor)	0.01mH ~ 655.35mH （AC drive power <=55kW） 0.001mH ~ 65.535mH （AC drive power >55kW）	Tuned parameter	★
P1.09	Mutual inductive reactance (asynchronous motor)	0.1mH ~ 6553.5mH （AC drive power <=55kW） 0.01mH ~ 655.35mH （AC drive power >55kW）	Tuned parameter	★
P1.10	No-load current (synchronous motor)	0.01A ~ P1.03（AC drive power <=55kW） 0.1A ~ P1.03（AC drive power >55kW）	Tuned parameter	★
P1.27	Encoder pulses per revolution	1 ~ 65535	1024	★
P1.28	Encoder type	0：ABZ incremental encoder 2：Resolver	0	★
P1.30	AB phase sequence of ABZ incremental encoder AB phase sequence	0：Forward 1：Reverse	0	★
P1.31	Encoder install angle	0.0 ~ 359.9°	0.0°	★
P1.34	Rotation pole logarithm	1 ~ 65535	1	★
P1.36	Speed feedback PG card break line detection time	0.0：No action 0.1s ~ 10.0s	0.0	★

P1.37	Auto tuning selection	0：No operation 1：static auto-tuning 2：dynamic auto-tuning 3：complete static auto-tuning	0	★
Group P2 Motor vector control parameter				
P2.00	Speed loop proportional gain 1	1 ~ 100	30	☆
P2.01	Speed loop integral time 1	0.01s ~ 10.00s	0.50s	☆
P2.02	Switchover frequency 1	0.00 ~ P2.05	5.00Hz	☆
P2.03	Speed loop proportional gain 2	1 ~ 100	20	☆
P2.04	Speed loop integral time 2	0.01s ~ 10.00s	1.00s	☆
P2.05	Switchover frequency 2	P2.02 ~ Maximum frequency	10.00Hz	☆
P2.06	Vector control slip gain	50% ~ 200%	100%	☆
P2.07	Time constant of speed loop filter	0.000s ~ 0.100s	0.015s	☆
P2.08	Vector control over-excitation gain	0 ~ 200	64	☆
P2.09	Torque upper limit sourcein speed control mode	0：P2.10 1：FIV（above 7.5KW） 2：FIC 3：Reserved 4：PULSE（S3，above 3.7KW） 5：Communication setting 6：MIN（FIV,FIC）（above 7.5KW） 7：MAX（FIV,FIC）（above 7.5KW） The full range of 1-7 is correspond to P2.10	0	☆
P2.10	Torque upper limit setting in speed control mode (electrical)	0.0% ~ 200.0%	150.0%	☆
P2.11	Torque upper limit instruction selection in speed control mode (generation)	0： P2.10 1：FIV（above 7.5KW） 2：FIC 3：Reserved 4：PULSE（S3，above 3.7KW） 5：Communication setting 6：MIN（FIV,FIC）（above7.5KW） 7：MAX（FIV,FIC）（above 7.5KW） 8：P2.12 setting Full range of 1-7 corresponding to P2.12	0	☆
P2.12	Torque upper limit digital setting in speed control mode	0.0% ~ 200.0%	150.0%	☆

	(generation)			
P2.13	Excitation adjustment proportional gain	0 ~ 60000	2000	☆
P2.14	Excitation adjustment integral gain	0 ~ 60000	1300	☆
P2.15	Torque adjustment proportional gain	0 ~ 60000	2000	☆
P2.16	Torque adjustment integral gain	0 ~ 60000	1300	☆
P2.17	Speed loop integral property	Unit's digit: integral separation 0: Disabled 1: Enabled	0	☆
P2.21	Maximum torque coefficient of field weakening	50% ~ 200%	100%	☆
P2.22	Generation power limit enabled	0: Disabled 1: Enabled always 2: Enabled when constant speed 3: Enabled when deceleration	0	☆
P2.23	Generation power upper limit	0.0%~200.0%	Model dependent	☆
Group P3 V/F control parameters				
P3.00	VF curve setting	0: Linear V/F 1: Multi-point V/F 2: Square V/F 3: 1.2-power V/F 4: 1.4-power V/F 6: 1.6-power V/F 8: 1.8-power V/F 9: Reserved 10: VF complete separation 11: VF half separation	0	★
P3.01	Torque boost	0.0%: (fixed torque boost) 0.1% ~ 30.0%	Model dependent	☆
P3.02	Cut-off frequency of torque boost	0.00Hz ~ Maximum frequency	50.00Hz	★
P3.03	Multi-point VF frequency 1	0.00Hz ~ P3.05	0.00Hz	★
P3.04	Multi-point voltage 1	0.0% ~ 100.0%	0.0%	★
P3.05	Multi-point VF frequency 2	P3.03 ~ P3.07	0.00Hz	★
P3.06	Multi-point voltage 2	0.0% ~ 100.0%	0.0%	★
P3.07	Multi-point VF frequency 3	P3.05 ~ rated motor frequency (P1.04)	0.00Hz	★
P3.08	Multi-point voltage 3	0.0% ~ 100.0%	0.0%	★
P3.09	V/F slip compensation gain	0.0% ~ 200.0%	0.0%	☆

P3.10	V/F over-excitation gain	0 ~ 200	64	☆
P3.11	V/F oscillation suppression gain	0 ~ 100	Model dependent	☆
P3.13	Voltage source for V/F separation	0：Digital setting（P3.14） 1：FIV（above 7.5KW） 2：FIC 3：Reserved 4：PULSE（S3，above 3.7KW） 5：Multi-reference 6：Simple PLC 7：PID 8：Communication setting Note：100.0% corresponding to the rated motor voltage	0	☆
P3.14	Voltage digital setting for V/F separation	0V ~ rated motor voltage	0V	☆
P3.15	Voltage acceleration time for V/F separation	0.0s ~ 1000.0s Note：it indicated the time for the voltage change from 0V to rated motor voltage	0.0s	☆
P3.16	Voltage deceleration time for V/F separation	0.0s ~ 1000.0s Note：it indicated the time for the voltage change from the rated motor voltage to 0V	0.0s	☆
P3.17	Stop mode selection for V/F separation	0: Frequency/voltage independent decline to 0 1: After voltage decline to 0 then decline the frequency	0	☆
P3.18	Action current of the over current lost speed	50%~200%	150%	★
P3.19	Over current lost speed enabled	0：Disabled 1：Enabled	1	★
P3.20	Over current lost speed suppression gain	0~100	20	☆
P3.21	Triple-speed suppression of action current compensation coefficient	50%~200%	50%	★
P3.22	Action voltage of the over voltage lost speed	650.0V~800.0V	770.0V	★
P3.23	Over voltage lost speed enabled	0：Disabled 1：Enabled	1	★
P3.24	Suppression frequency gain of over voltage lost speed	0~100	30	☆

P3.25	Suppression voltage gain of over voltage lost speed	0~100	30	☆
P3.26	Maximum rising frequency limit of over voltage lost speed	0~50Hz	5Hz	★
Group P4 Input terminal				
P4.00	FWD terminal function selection	0：No function 1：Forward RUN（FWD） 2：Reverse RUN（REV） 3：Three-line control 4：Forward JOG（JOGF） 5：Reverse JOG（JOGR） 6：Terminal UP 7：Terminal DOWN 8：Coast to stop 9： Fault reset（RESET） 10：Run pause 11：Normally open (NO) input of external fault 12：Multi-reference terminal 1 13：Multi-reference terminal 2 14：Multi-reference terminal 3 15：Multi-reference terminal 4 16: Terminal 1 for acceleration/deceleration time selection 17 : Terminal 2 for acceleration/deceleration time selection 18：Frequency source switchover 19：UP/DOWN setting clear（terminal、operation panel） 20：Command source switchover terminal 21 : Acceleration/Deceleration prohibited 22：PID pause 23：PLC status reset 24：Swing pause 25：Counter input 26：Counter reset 27：Length count input 28：Length reset 29：Torque control prohibited	1	★
P4.01	REV terminal function selection		4	★
P4.02	S1 terminal function selection		9	★
P4.03	S2 terminal function selection		12	★
P4.04	S3 terminal function selection		13	★
P4.05	S4 terminal function selection		0	★
P4.06	Reserved		0	★
P4.07	Reserved		0	★

		30：PULSE frequency input （Enabled only for S3，above 3.7KW） 31：Reserved 32：Immediate DC braking 33：Normally closed (NC) input of external fault 34：Frequency modification enabled 35：Reverse PID action direction 36：External stop terminal 1 37：Command source switchover terminal 2 38：PID integral pause 39：Switchover between main frequency source X and preset frequency 40：Switchover between auxiliary frequency source Y and preset frequency 41~42：Reserved 43：PID parameter switchover 44~45：Reserved 46：Speed control /Torque control switchover 47：Emergency stop 48：External stop terminal 2 49：Deceleration DC braking 50：Clear the current running time 51-59: Reserved		
P4.10	X filter time	0.000s ~ 1.000s	0.010s	☆
P4.11	Terminal command mode	0：Two-line mode 1 1：Two-line mode 2 2：Three-line mode 1 3：Three-line mode 2	0	★
P4.12	Terminal UP/DOWN rate	0.001Hz/s ~ 65.535Hz/s	1.00Hz/s	☆
P4.13	FI curve 1 minimum input	0.00V ~ P4.15	0.00V	☆
P4.14	Corresponding setting of FI curve 1 minimum input	-100.0% ~ +100.0%	0.0%	☆
P4.15	FI curve 1 maximum input	P4.13 ~ +10.00V	10.00V	☆
P4.16	Corresponding setting of FI curve 1 maximum input	-100.0% ~ +100.0%	100.0%	☆
P4.17	FI curve 1 filter time	0.00s ~ 10.00s	0.10s	☆
P4.18	FI curve 2 minimum input	0.00V ~ P4.20	0.00V	☆

P4.19	Corresponding setting of FI curve 2 minimum input	-100.0% ~ +100.0%	0.0%	☆
P4.20	FI curve 2 maximum input	P4.18 ~ +10.00V	10.00V	☆
P4.21	Corresponding setting of FI curve 2 maximum input	-100.0% ~ +100.0%	100.0%	☆
P4.22	FI curve 2 filter time	0.00s ~ 10.00s	0.10s	☆
P4.23	FI curve 3 minimum input	-10.00V ~ P4.25	-10.00V	☆
P4.24	Corresponding setting of FI curve 3 minimum input	-100.0% ~ +100.0%	-100.0%	☆
P4.25	FI curve 3 maximum input	P4.23 ~ +10.00V	10.00V	☆
P4.26	Corresponding setting of FI curve 3 maximum input	-100.0% ~ +100.0%	100.0%	☆
P4.27	FI curve 3 filter time	0.00s ~ 10.00s	0.10s	☆
P4.28	PULSE minimum input	0.00kHz ~ P4.30	0.00kHz	☆
P4.29	Corresponding setting of PULSE minimum input	-100.0% ~ 100.0%	0.0%	☆
P4.30	PULSE maximum input	P4.28 ~ 100.00kHz	50.00kHz	☆
P4.31	Corresponding setting of PULSE maximum input	-100.0% ~ 100.0%	100.0%	☆
P4.32	PULSE filter time	0.00s ~ 10.00s	0.10s	☆
P4.33	FI curve selection	Unit's digit: FIV curve selection 1: Curve 1 (2 points, See P4.13 ~ P4.16) 2: Curve 2 (2 points, See P4.18 ~ P4.21) 3: Curve 3 (2 points, See P4.23 ~ P4.26) 4: Curve 4 (4 points, See C6.00 ~ C6.07) 5: Curve 5 (4 points, See C6.08 ~ C6.15) Ten's digit: FIC curve selection, Sam as FIV Hundred's digit: Reserved	321	☆
P4.34	Setting selection for FI less than minimum input	Unit's digit: Setting for FIV less than minimum input 0: Corresponds to the minimum input settings 1:0.0% Ten's digit: Setting selection for FIC less than minimum input (same as FIV)	000	☆
P4.35	FWD delay time	0.0s ~ 3600.0s	0.0s	★
P4.36	REV delay time	0.0s ~ 3600.0s	0.0s	★
P4.37	S1 delay time	0.0s ~ 3600.0s	0.0s	★

P4.38	S terminal valid mode selection 1	0：High level valid 1：Low level valid Unit's digit： FWD Ten's digit： REV Hundred's digit：S1 Thousand's digit：S2 Ten thousand's digit：S3	00000	★
P4.39	S terminal valid mode selection 2	0：High level valid 1：Low level valid Unit's digit：S4 Ten's digit：Reserved Hundred's digit：Reserved Thousand's digit：Reserved Ten thousand's digit：Reserved	00000	★
Group P5 Output terminals				
P5.00	MO1 terminal output mode selection	0：Pulse output（YOP） 1：Switch signal output（YOR）	0	☆
P5.01	YOR output function selection	0：No output 1：AC drive running 2：Fault output（fault stop） 3：Frequency-level detection FDT1 output 4：Frequency reached 5：Zero-speed running(no output at stop) 6：Motor overload pre-warning 7：AC drive overload pre-warning 8：Setting count value Reached 9：Designated count value reached 10：Length reached 11：PLC cycle complete 12：Accumulative running time reached 13：Frequency limited 14：Torque limited 15：Ready for RUN 16：FIV>FIC 17：Frequency upper limit reached 18：Frequency lower limit reached（Relate to running） 19：Under voltage state output 20：Communication setting 21：（Reserved） 22：（Reserved）	0	☆
P5.02	Relay function selection on control board (RA-RB-RC/RB-RC)		2	☆
P5.03	Relay function selection（TA-TC）		0	☆
P5.04	Reserved		1	☆
P5.05	Reserved		4	☆

		23：Zero-speed running 2（having output at stop） 24：Accumulative power-on time reached 25：Frequency level detection FDT2 output 26：Frequency 1 reached output 27：Frequency 2 reached output 28：Current 1 reached output 29：Current 2 reached output 30：Timing reached output 31：FIV input limit exceeded 32：Load becoming 0 33：Reverse running 34：Zero current state 35：Module temperature reached 36：Output current limit exceeded 37：Frequency lower limit reached (having output at stop) 38：Alarm output (Keep running) 40：Current running time reached 41：Fault		
P5.06	YOP output function selection	0：Running frequency 1：Setting frequency 2：Output current 3：Output torque 4：Output power 5：Output voltage 6：PULSE input（100.% corresponding to 100.0kHz） 7：FIV 8：FIC 9：Reserved 10：Length 11：Count value 12：Communication setting 13：Motor rotational speed 14：Output current（100.0% corresponding to 1000.0A） 15：Output voltage（100.0% corresponding to 1000.0V） 16：Motor output torque（Actual value, corresponding to the motor	0	☆
P5.07	FOV output function selection（above 3.7KW）		0	☆
P5.08	FOC output function selection（above 7.5KW）		1	☆

		percentage）		
P5.09	YOP output maximum frequency	0.01kHz ~ 100.00kHz	50.00kHz	☆
P5.10	FOV bias coefficient	-100.0% ~ +100.0%	0.0%	☆
P5.11	FOV gain	-10.00 ~ +10.00	1.00	☆
P5.12	FOC bias coefficient	-100.0% ~ +100.0%	0.0%	☆
P5.13	FOC gain	-10.00 ~ +10.00	1.00	☆
P5.17	YOR output delay time	0.0s ~ 3600.0s	0.0s	☆
P5.18	RA-RB-RC/RB-RC output delay time	0.0s ~ 3600.0s	0.0s	☆
P5.19	TA-TC output delay time	0.0s ~ 3600.0s	0.0s	☆
P5.20	Reserved	0.0s ~ 3600.0s	0.0s	☆
P5.21	Reserved	0.0s ~ 3600.0s	0.0s	☆
P5.22	Output terminal valid mode selection	0：Positive logic 1：Negative logic Unit's digit：YOR Ten's digit：RA-RB-RC/RB-RC Hundred's digit： TA-TC	00000	☆
Group P6 Start/Stop parameter				
P6.00	Start mode	0：Direct start 1：Rotational speed tracking restart speed tracking restarts 2:Pre-excited start （AC asynchronous motor） 3：SVC quick start	0	☆
P6.01	Rotational speed tracking mode	0:Start from the stop frequency 1: Start from 0 2:Start from maximum frequency	0	★
P6.02	Rotational speed tracking	1 ~ 100	20	☆
P6.03	Startup frequency	0.00Hz ~ 10.00Hz	0.00Hz	☆
P6.04	Startup frequency holding time	0.0s ~ 100.0s	0.0s	★
P6.05	Startup DC braking current/Pre-excited current	0% ~ 100%	50%	★
P6.06	Startup DC braking time/Pre-excited time	0.0s ~ 100.0s	0.0s	★
P6.07	Acceleration/Deceleration mode	0: Straight-line acceleration/deceleration 1：S curve acceleration/deceleration A 2: Dynamic S curve acceleration/deceleration	0	★
P6.08	S curve of beginning segment time proportional	0.0% ~ （100.0%-P6.09）	30.0%	★

P6.09	S curve of end segment time proportional	0.0% ~ （100.0%-P6.08）	30.0%	★
P6.10	Stop mode	0：Deceleration to stop 1：Coast to stop	0	☆
P6.11	Initial frequency of stop DC braking	0.00Hz ~ maximum frequency	0.00Hz	☆
P6.12	Waiting time of stop DC braking	0.0s ~ 100.0s	0.0s	☆
P6.13	Stop DC braking current	0% ~ 100%	0%	☆
P6.14	Stop DC braking time	0.0s ~ 100.0s	0.0s	☆
P6.15	Brake use rate	0% ~ 100%	100%	☆
P6.18	Rotational speed tracking current	30%~200%	Model dependent	★
P6.21	Demagnetization time（Valid for SVC）	0.00~5.00s	Model dependent	☆
P6.23	Over-excitation selection	0：Not effective 1：Effective only when deceleration 2：Effective always	0	☆
P6.24	Over-excitation suppression current value	0~150%	100%	☆
P6.25	Over-excitation gain	1.00~2.50	1.25	☆
Group P7 Operation display and Display				
P7.01	JOG function parameter	0：No function 1：Switchover between operation panel command and remote operation command. It indicates the switchover between the current command source and operation panel control （local operation）. If the current command source is operation panel control, the key is invalid. 2：Switchover between forward and reverse through JOG, it only valid when command source is operation panel channel. 3：Forward Jog （JOG-FWD） 4：Reverse Jog（JOG-REV）	0	★
P7.02	STOP/RESET key function	0：STOP/RESET key enabled only in operation panel control 1：STOP/RESET key enabled in any operation mode	1	☆
		0000 ~ FFFF Bit00: Running frequency 1（Hz）	1F	☆

P7.03	LED display running parameter 1	Bit01: Setting frequency（Hz） Bit02: Bus voltage（V） Bit03: Output voltage（V） Bit04: Output current（A） Bit05: Output power（kW） Bit06: Output torque（%） Bit07: S input status Bit08: MO1 output status Bit09:FIV Voltage（V） Bit10: FIC Voltage（V） Bit11: Reserved Bit12: Count value Bit13: Length value Bit14: Load speed display Bit15: PID setting		
P7.04	LED display running parameter 2	0000 ~ FFFF Bit00: PID feedback Bit01: PLC stage Bit02: Pulse input frequency(kHz) Bit03: Running frequency 2 (Hz) Bit04: Remaining running time Bit05： FIV voltage before correction（V） Bit06: FIC voltage before correction (V) Bit07: Reserved Bit08： Motor rotational speed Bit09:Current power-on time(Hour） Bit10: Current running time (Min) Bit11: Pulse input frequency (Hz) Bit12: Communication setting value Bit13:Speed feedback of Encoder(Hz） Bit14: Main frequency X display (Hz) Bit15: Auxiliary frequency Y display (Hz)	0	☆
P7.05	LED display stop parameter	0000 ~ FFFF Bit00: Set frequency (Hz) Bit01: Bus voltage (V) Bit02: S input status Bit03: MO1 output status	33	☆

		Bit04: FIV voltage (V) Bit05: FIC voltage（V） Bit07: Count value Bit08: Length value Bit09: PLC stage Bit10: Load speed Bit11: PID setting Bit12: Pulse input frequency(kHz)		
P7.06	Load speed display coeffcient	0.0001 ~ 6.5000	1.0000	☆
P7.07	Heatsink temperature of inverter IGBT	0.0℃ ~ 120.0℃	-	●
Group P8 Auxiliary Functions				
P8.00	JOG running frequency	0.00Hz ~ maximum frequency	2.00Hz	☆
P8.01	JOG acceleration time	0.0s ~ 6500.0s	20.0s	☆
P8.02	JOG deceleration time	0.0s ~ 6500.0s	20.0s	☆
P8.03	Acceleration time 2	0.00s ~ 65000s	Model dependent	☆
P8.04	Deceleration time 2	0.0s ~ 65000s	Model dependent	☆
P8.05	Acceleration time 3	0.0s ~ 65000s	Model dependent	☆
P8.06	deceleration time 3	0.0s ~ 65000s	Model dependent	☆
P8.07	Acceleration time 4	0.0s ~ 65000s	Model dependent	☆
P8.08	deceleration time 4	0.0s ~ 65000s	Model dependent	☆
P8.09	Jump frequency 1	0.00Hz ~ maximum frequency	0.00Hz	☆
P8.10	Jump frequency 2	0.00Hz ~ maximum frequency	0.00Hz	☆
P8.11	Frequency jump amplitude	0.00Hz ~ maximum frequency	0.00Hz	☆
P8.12	Forward/Reverse rotation dead-zone time	0.0s ~ 3000.0s	0.0s	☆
P8.13	Reverse control	0：Enabled 1：Disabled	0	☆
P8.14	Running mode when set frequency lower than frequency lower limit	0：Run at frequency lower limit 1：Stop 2：Run at zero speed	0	☆
P8.15	Droop control	0.00Hz ~ 10.00Hz	0.00Hz	☆
P8.16	Accumulative power-on time threshold setting	0h ~ 65000h	0h	☆
P8.17	Accumulative running time threshold setting	0h ~ 65000h	0h	☆
P8.18	Startup protection	0：No protect	0	☆

		1：Protect		
P8.19	Frequency detection value（FDT1）	0.00Hz ~ maximum frequency	50.00Hz	☆
P8.20	Frequency detection hysteresis（FDT1）	0.0% ~ 100.0%（FDT1 level）	5.0%	☆
P8.21	Detection range of frequency reached	0.0% ~ 100.0%（maximum frequency）	0.0%	☆
P8.22	Jump frequency during the process of acceleration/deceleration	0：Disabled 1：Enabled	0	☆
P8.25	Frequency switchover point between acceleration time 1 and acceleration time 2	0.00Hz ~ maximum frequency	0.00Hz	☆
P8.26	Frequency switchover point between deceleration time 1 and deceleration time 2	0.00Hz ~ maximum frequency	0.00Hz	☆
P8.27	Terminal JOG preferred	0：Disabled 1：Enabled	0	☆
P8.28	Frequency detection value（FDT2）	0.00Hz ~ maximum frequency	50.00Hz	☆
P8.29	Frequency detection hysteresis（FDT2）	0.0% ~ 100.0%（FDT2 level）	5.0%	☆
P8.30	Any frequency reaching detection value 1	0.00Hz ~ maximum frequency	50.00Hz	☆
P8.31	Any frequency reaching detection amplitude 1	0.0% ~ 100.0%（maximum frequency）	0.0%	☆
P8.32	Any frequency reaching detection value 2	0.00Hz ~ maximum frequency	50.00Hz	☆
P8.33	Any frequency reaching detection amplitude 2	0.0% ~ 100.0%（maximum frequency）	0.0%	☆
P8.34	Zero current detection level	0.0% ~ 300.0% 100.0% corresponding to rated motor current	5.0%	☆
P8.35	Zero current detection delay time	0.01s ~ 600.00s	0.10s	☆
P8.36	Output over-current threshold	0.0%（no detection） 0.1% ~ 300.0%（rated motor current）	200.0%	☆
P8.37	Output over-current detection delay time	0.00s ~ 600.00s	0.00s	☆
P8.38	Any current reaching 1	0.0% ~ 300.0%（rated motor current）	100.0%	☆
P8.39	Any current reaching 1	0.0% ~ 300.0%（rated motor	0.0%	☆

	amplitude	current)		
P8.40	Any current reaching 2	0.0% ~ 300.0% (rated motor current)	100.0%	☆
P8.41	Any current reaching 2 amplitude	0.0% ~ 300.0% (rated motor current)	0.0%	☆
P8.42	Timing function selection	0: Disabled 1:Enabled	0	☆
P8.43	Timing duration source	0: P8.44 1: FIV 2: FIC 3: Reserved 100% of analog input corresponds to the value of P8.44	0	☆
P8.44	Timing duration	0.0Min ~ 6500.0Min	0.0Min	☆
P8.45	FIV input voltage lower limit protection value	0.00V ~ P8.46	3.10V	☆
P8.46	FIV input voltage upper limit protection value	P8.45 ~ 10.00V	6.80V	☆
P8.47	Module temperature threshold	0℃ ~ 100℃	75℃	☆
P8.48	Cooling fan control	0: Fan working during running 1: Fan working continuously	0	☆
P8.49	Wakeup frequency	Dormant frequency (P8.51) ~ maximum frequency (P0.10)	0.00Hz	☆
P8.50	Wakeup delay time	0.0s ~ 6500.0s	0.0s	☆
P8.51	Dormant frequency	0.00Hz ~ wakeup frequency (P8.49)	0.00Hz	☆
P8.52	Dormant delay time	0.0s ~ 6500.0s	0.0s	☆
P8.53	Current running time reached	0.0Min ~ 6500.0Min	0.0Min	☆
P8.54	Output power correction coefficient	0~200%	100%	☆
P8.55	Emergency deceleration time	0~6553.5s	Model dependent	☆
Group P9: Fault and Protection				
P9.00	Motor overload protection selection	0: Disabled 1: Enabled	1	☆
P9.01	Motor overload protection gain	0.20 ~ 10.00	1.00	☆
P9.02	Motor overload warning coefficient	50% ~ 100%	80%	☆
P9.03	Over voltage stall gain	0 ~ 100	30	☆
P9.04	Protection voltage of over voltage stall	120% ~ 150%	130%	☆

P9.07	Short-circuit to ground upon power on	0：Disabled 1：Enabled	1	☆
P9.09	Fault auto reset times	0 ~ 20	0	☆
P9.10	YO action selection during fault auto reset	0：No act 1：Act	0	☆
P9.11	Time interval of fault auto reset	0.1s ~ 100.0s	1.0s	☆
P9.12	Input phase lost/contactor suction protection selection	Unit's digit: Input phase lost protection Ten's digit: contactor suction protection 0: disabled 1: enabled	00	☆
P9.13	Output phase loss protection selection	0：Disabled 1：Enabled Unit's digit: output phase loss protection Ten's digit: output phase loss protection before running	1	☆
P9.14	1st fault type	0: No fault 1: Reserved 2: Over-current during acceleration 3: Over-current during deceleration 4: Over-current at constant speed 5: Over-voltage during acceleration 6: Over-voltage during deceleration 7: Over-voltage at constant speed 8: Over-load of butter resistance 9: Under voltage 10:AC drive overload 11: Motor overload 12: Input Phase lost		●
P9.15	2nd fault type	13: Power output phase loss 14: Module overheat 15: External equipment fault 16: Communication fault 17: Contactor fault 18: Current detection fault 19: Motor auto-tuning fault 20: Encoder/PG card fault 21: Parameters read-write fault 22: AC drive hardware fault 23: Short circuit to ground	-	●

		24: Reserved 25: Reserved		
P9.16	3rd (latest) fault type	26: Running time reached 27: User-defined fault 1 28: User-defined fault 2 29: Power-on time reached 30: Load becoming 0 31: PID feedback lost during running 40: Fast limit overtime 41: Switchover motor when running 42: Speed deviation too large 43：Motor over speed 45： Motor over temperature 51：Initial position fault	－	●
Group PA PID function				
PA.00	PID setting source	0：PA.01 1：FIV 2：FIC 3：Reserved 4：PULSE（S3，above 3.7KW） 5：Communication setting 6：Multi-reference	0	☆
PA.01	PID digit setting	0.0% ~ 100.0%	50.0%	☆
PA.02	PID feedback source	0：FIV 1：FIC 2：Reserved 3：FIV-FIC 4：PULSE（S3，above 3.7KW） 5：Communication setting 6：FIV+FIC 7：MAX（|FIV|, |FIC|） 8：MIN（|FIV|, |FIC|） operation panel |, |FIC|）	0	☆
PA.03	PID action direction	0：Forward action 1：Reverse action	0	☆
PA.04	PID setting feedback range	0 ~ 65535	1000	☆
PA.05	Proportional gain Kp1	0.0 ~ 100.0	20.0	☆
PA.06	Integral time Ti1	0.01s ~ 10.00s	2.00s	☆
PA.07	Differential time Td1	0.000s ~ 10.000s	0.000s	☆
PA.08	Cut-off frequency of PID reverse rotation	0.00 ~ maximum frequency	2.00Hz	☆
PA.09	PID deviation limit	0.0% ~ 100.0%	0.0%	☆

PA.10	PID differential limit	0.00% ~ 100.00%	0.10%	☆
PA.11	PID setting change time	0.00 ~ 650.00s	0.00s	☆
PA.12	PID feedback filter time	0.00 ~ 60.00s	0.00s	☆
PA.13	PID output filter time	0.00 ~ 60.00s	0.00s	☆
PA.14	Reserved	-	-	☆
PA.15	Proportional gain KP1	0.0 ~ 100.0	20.0	☆
PA.16	Integral time Ti2	0.01s ~ 10.00s	2.00s	☆
PA.17	Differential time Td2	0.000s ~ 10.000s	0.000s	☆
PA.18	PID parameter switchover condition	0：No switchover 1：Switchover via S terminal 2：Automatic switchover based on deviation 3：Automatic switchover based on running frequency	0	☆
PA.19	PID parameter switchover deviation 1	0.0% ~ PA.20	20.0%	☆
PA.20	PID parameter switchover deviation 2	PA.19 ~ 100.0%	80.0%	☆
PA.21	PID initial value	0.0% ~ 100.0%	0.0%	☆
PA.22	PID initial value holding time	0.00 ~ 650.00s	0.00s	☆
PA.25	PID integral property	Unit's digit：Integral separated 0：Invalid 1：Valid Ten's digit：Whether to stop integral operation when the output reaches 0：Continue integral operation 1：Stop integral operation	00	☆
PA.26	Detection value of PID feedback loss	0.0%：Not judging feedback loss 0.1% ~ 100.0%	0.0%	☆
PA.27	Detection time of PID feedback loss	0.0s ~ 20.0s	0.0s	☆
PA.28	PID operation at stop	0：No PID operation at stop 1：PID operation at stop	0	☆
Group PB Swing frequency，fixed length and count				
PB.00	Swing frequency setting mode	0: Relative to the central frequency 1: Relative to the maximum frequency	0	☆
PB.01	Swing frequency amplitude	0.0%~100.0%	0.0%	☆
PB.02	Jump frequency amplitude	0.0%~50.0%	0.0%	☆
PB.03	Swing frequency cycle	0.1s~3000.0s	10.0s	☆
PB.04	Triangular wave rising time	0.1%~100.0%	50.0%	☆

	coefficient			
PB.05	Set length	0m~65535m	1000m	☆
PB.06	Actual length	0m~65535m	0m	☆
PB.07	Number of pulses per meter	0.1~6553.5	100.0	☆
PB.08	Set count value	1~65535	1000	☆
PB.09	Designated count value	1~65535	1000	☆
Group PC Multi-Reference and Simple PLC Function				
PC.00	Multi-Reference 0	-100.0% ~ 100.0%	0.0%	☆
PC.01	Multi-Reference 1	-100.0% ~ 100.0%	0.0%	☆
PC.02	Multi-Reference 2	-100.0% ~ 100.0%	0.0%	☆
PC.03	Multi-Reference 3	-100.0% ~ 100.0%	0.0%	☆
PC.04	Multi-Reference 4	-100.0% ~ 100.0%	0.0%	☆
PC.05	Multi-Reference 5	-100.0% ~ 100.0%	0.0%	☆
PC.06	Multi-Reference 6	-100.0% ~ 100.0%	0.0%	☆
PC.07	Multi-Reference 7	-100.0% ~ 100.0%	0.0%	☆
PC.08	Multi-Reference 8	-100.0% ~ 100.0%	0.0%	☆
PC.09	Multi-Reference 9	-100.0% ~ 100.0%	0.0%	☆
PC.10	Multi-Reference 10	-100.0% ~ 100.0%	0.0%	☆
PC.11	Multi-Reference 11	-100.0% ~ 100.0%	0.0%	☆
PC.12	Multi-Reference 12	-100.0% ~ 100.0%	0.0%	☆
PC.13	Multi-Reference 13	-100.0% ~ 100.0%	0.0%	☆
PC.14	Multi-Reference 14	-100.0% ~ 100.0%	0.0%	☆
PC.15	Multi-Reference 15	-100.0% ~ 100.0%	0.0%	☆
PC.16	Simple PLC running mode	0: Stop after the AC drive runs one cycle 1: Keep final values after the AC drive runs one cycle 2: Repeat after the AC drive runs one cycle	0	☆
PC.17	Simple PLC retentive selection	Unit's digit: Retentive upon power failure 0: No 1: Yes Ten's digit: Retentive upon stop 0: No 1: Yes	00	☆
PC.18	Running time of simple PLC reference 0	0.0s (h) ~ 6500.0s (h)	0.0s (h)	☆
PC.19	Acceleration/deceleration time of simple PLC reference 0	0 ~ 3	0	☆
PC.20	Running time of simple PLC reference 1	0.0s (h) ~ 6500.0s (h)	0.0s (h)	☆

PC.21	Acceleration/deceleration time of simple PLC reference 1	0 ~ 3	0	☆
PC.22	Running time of simple PLC reference 2	0.0s（h） ~ 6500.0s（h）	0.0s（h）	☆
PC.23	Acceleration/deceleration time of simple PLC reference 2	0 ~ 3	0	☆
PC.24	Running time of simple PLC reference 3	0.0s（h） ~ 6500.0s（h）	0.0s（h）	☆
PC.25	Acceleration/deceleration time of simple PLC reference 3	0 ~ 3	0	☆
PC.26	Running time of simple PLC reference 4	0.0s（h） ~ 6500.0s（h）	0.0s（h）	☆
PC.27	Acceleration/deceleration time of simple PLC reference 4	0 ~ 3	0	☆
PC.28	Running time of simple PLC reference 5	0.0s（h） ~ 6500.0s（h）	0.0s（h）	☆
PC.29	Acceleration/deceleration time of simple PLC reference 5	0 ~ 3	0	☆
PC.30	Running time of simple PLC reference 6	0.0s（h） ~ 6500.0s（h）	0.0s（h）	☆
PC.31	Acceleration/deceleration time of simple PLC reference 6	0 ~ 3	0	☆
PC.32	Running time of simple PLC reference 7	0.0s（h） ~ 6500.0s（h）	0.0s（h）	☆
PC.33	Acceleration/deceleration time of simple PLC reference 7	0 ~ 3	0	☆
PC.34	Running time of simple PLC reference 8	0.0s（h） ~ 6500.0s（h）	0.0s（h）	☆
PC.35	Acceleration/deceleration time of simple PLC reference 8	0 ~ 3	0	☆
PC.36	Running time of simple PLC reference 9	0.0s（h） ~ 6500.0s（h）	0.0s（h）	☆
PC.37	Acceleration/deceleration time of simple PLC reference 9	0 ~ 3	0	☆
PC.38	Running time of simple PLC	0.0s（h） ~ 6500.0s（h）	0.0s（h）	☆

	reference 10			
PC.39	Acceleration/deceleration time of simple PLC reference 10	0 ~ 3	0	☆
PC.40	Running time of simple PLC reference 11	0.0s（h） ~ 6500.0s（h）	0.0s（h）	☆
PC.41	Acceleration/deceleration time of simple PLC reference 11	0 ~ 3	0	☆
PC.42	Running time of simple PLC reference 12	0.0s（h） ~ 6500.0s（h）	0.0s（h）	☆
PC.43	Acceleration/deceleration time of simple PLC reference 12	0 ~ 3	0	☆
PC.44	Running time of simple PLC reference 13	0.0s（h） ~ 6500.0s（h）	0.0s（h）	☆
PC.45	Acceleration/deceleration time of simple PLC reference 13	0 ~ 3	0	☆
PC.46	Running time of simple PLC reference 14	0.0s（h） ~ 6500.0s（h）	0.0s（h）	☆
PC.47	Acceleration/deceleration time of simple PLC reference 14	0 ~ 3	0	☆
PC.48	Running time of simple PLC reference 15	0.0s（h） ~ 6500.0s（h）	0.0s（h）	☆
PC.49	Acceleration/deceleration time of simple PLC reference 15	0 ~ 3	0	☆
PC.50	Time unit of simple PLC running	0：s（second） 1：h（hour）	0	☆
PC.51	Reference 0 source	0：Set by PC.00 1：FIV 2：FIC 3：Reserved 4：PULSE 5：PID 6：Set by preset frequency（P0.08）, UP/DOWN can be modified	0	☆
Group PD: Communication Parameters				
PD.00	Baud rate	Unit's digit：MODBUS 0：300BPS 1：600BPS	0005	☆

		2：1200BPS 3：2400BPS 4：4800BPS 5：9600BPS 6：19200BPS 7：38400BPS 8：57600BPS 9：115200BPS Ten's digit: Reserved Hundred's digit: Reserved Thousand's digit: Reserved		
PD.01	Data format	0：No check, <8-N-2> 1：Even parity check, <8-E-1> 2：Odd Parity check, <8-O-1> 3：8-N-1	3	☆
PD.02	Local address	1 ~ 247	1	☆
PD.03	Response delay	0ms ~ 20ms	2	☆
PD.04	Communication timeout	0.0（Invalid），0.1s ~ 60.0s	0.0	☆
PD.05	Data transfer format selection	Unit's digit：MODBUS 0：Non-standard MODBUS protocol 1： Standard MODBUS protocol Ten's digit： Reserved	1	☆
PD.06	Communication reading current resolution	0：0.01A 1：0.1A	1	☆
Group PP: User-Defined Function Codes				
PP.00	User password	0 ~ 65535	0	☆
PP.01	Parameter Initialization	0：No operation 01：Restore factory settings except motor parameters	0	★
Group C0 Torque control parameter				
C0.00	Speed/Torque control mode selection	0：Speed control 1：Torque control	0	★
C0.01	Torque setting source selection in torque control mode	0：Digital setting 1（C0.03） 1：FIV 2：FIC 3：Reserved 4：PULSE 5：Communication setting 6：MIN（FIV,FIC） 7：MAX（FIV,FIC） （The full range of 1-7 corresponding to the digit setting of C0.03）	0	★

C0.03	Torque digit setting in torque control	-200.0% ~ 200.0%	150.0%	☆
C0.05	Forward maximum frequency in torque control	0.00Hz ~ maximum frequency	50.00Hz	☆
C0.06	Reverse maximum frequency in torque control	0.00Hz ~ maximum frequency	50.00Hz	☆
C0.07	Acceleration time in torque control	0.00s ~ 65000s	0.00s	☆
C0.08	Deceleration time in torque control	0.00s ~ 65000s	0.00s	☆
Group C5 Control optimization parameters				
C5.00	DPWM switchover frequency upper limit	0.00Hz ~ maximum frequency	8.00Hz	☆
C5.01	PWM modulation mode	0: Asynchronous modulation 1: Synchronous modulation	0	☆
C5.02	Dead zone compensation mode selection	0: No compensation 1: Compensation mode 1	1	☆
C5.03	Random PWM depth	0: Random PWM invalid 1 ~ 10: PWM carrier frequency random depth	0	☆
C5.04	Rapid current limit	0: Disabled 1: Enabled	1	☆
C5.05	Voltage over modulation coefficient	100 ~ 110	105	☆
C5.06	Under voltage threshold setting	210 ~ 420	350	☆
C5.08	Dead zone time adjustment	100% ~ 200%	150%	☆
C5.09	Over voltage threshold setting	200.0V ~ 2500.0V	Model dependent	
Group C6 FI curve setting (FI is FIV or FIC)				
C6.00	FI curve 4 minimum input	0.00V~C6.02	0.00V	☆
C6.01	Corresponding setting of FI curve 4 minimum input	-100.0%~+100.0%	0.0%	☆
C6.02	FI curve 4 inflexion 1 input	C6.00~C6.04	3.00V	☆
C6.03	Corresponding setting of FI curve 4 inflexion 1 input	-100.0%~+100.0%	30.0%	☆
C6.04	FI curve 4 inflexion 2 input	C6.02~C6.06	6.00V	☆
C6.05	Corresponding setting of FI curve 4 inflexion 2 input	-100.0%~+100.0%	60.0%	☆
C6.06	FI curve 4 maximum input	C6.06~+10.00V	100.0%	☆
C6.07	Corresponding setting of FI curve 4 maximum input	-100.0%~+100.0%	100.0%	☆
C6.08	FI curve 5 minimum input	0.00V~C6.10	0.00V	☆

C6.09	Corresponding setting of FI curve 5 minimum input	-100.0%~+100.0%	0.0%	☆
C6.10	FI curve 5 inflexion 1 input	C6.08~C6.12	3.00V	☆
C6.11	Corresponding setting of FI curve 5 inflexion 1 input	-100.0%~+100.0%	30.0%	☆
C6.12	FI curve 5 inflexion 2 input	C6.10~C6.14	6.00V	☆
C6.13	Corresponding setting of FI curve 5 inflexion 2 input	-100.0%~+100.0%	60.0%	☆
C6.14	FI curve 5 maximum input	C6.12~+10.00V	10.00V	☆
C6.15	Corresponding setting of FI curve	-100.0%~+100.0%	100.0%	☆
C6.16	Jump point of FIV	-100.0%~100.0%	0.0%	☆
C6.17	Jump point of FIC input	0.0%~100.0%	0.5%	☆
C6.18	Jump point of FIC input	-100.0%~100.0%	0.0%	☆
C6.19	Jump amplitude of FIC input	0.0%~100.0%	0.5%	☆

Monitoring parameters：

Function Code	Parameter Name	Unit
Group D0 Basic monitoring parameters		
D0.00	Running frequency（Hz）	0.01Hz
D0.01	Set frequency（Hz）	0.01Hz
D0.02	Bus voltage（V）	0.1V
D0.03	Output voltage（V）	1V
D0.04	Output current（A）	0.01A
D0.05	Output power（kW）	0.1kW
D0.06	Output torque（%）	0.1%
D0.07	S input status	1
D0.08	MO1 output status	1
D0.09	FIV Voltage（V）	0.01V
D0.10	FIC Voltage（V）	0.01V
D0.11	Reserved	
D0.12	Count value	1
D0.13	Length value	1
D0.14	Load speed display	1
D0.15	PID setting	1
D0.16	PID feedback	1
D0.17	PLC stage	1
D0.18	PULSE input pulse frequency（kHz）	0.01kHz

D0.19	Reserved	
D0.20	Remaining running time	0.1Min
D0.21	FIV voltage before correction	0.001V
D0.22	FIC voltage before correction	0.001V
D0.23	Reserved	
D0.24	Linear speed	1m/Min
D0.25	On the current power-on time	1Min
D0.26	The current running time	0.1Min
D0.27	Input pulse frequency	1Hz
D0.28	Communication setting value	0.01%
D0.29	Reserved	
D0.30	Reserved	
D0.31	Auxiliary frequency Y display	0.01Hz
D0.32	View any memory address values	1
D0.33	Reserved	
D0.34	Motor temperature value	1℃
D0.35	Target torque（%）	0.1%
D0.36	Reserved	1
D0.37	Power factor angle	0.1°
D0.38	Reserved	1
D0.39	Target voltage upon V/F separation	1V
D0.40	Output voltage upon V/F separation	1V
D0.41	Reserved	
D0.42	Reserved	
D0.43	Reserved	
D0.44	Reserved	
D0.45	Fault info	0
D0.58	Z signal counter	1
D0.59	Set frequency（%）	0.01%
D0.60	Running frequency（%）	0.01%
D0.61	AC drive status	1
D0.74	AC drive output torque	0.1
D0.76	Accumulative power consumption low level	0.1 ℃
D0.77	Accumulative power consumption high level	1℃
D0.78	Linear speed	1m/min

Fault code list:

Fault code	Name	Fault code	Name
OC1	Over current during acceleration	OUOC	Hardware failure
OC2	Over current during deceleration	IE	Current detection fault
OC3	Over current during constant speed	TE	Motor auto-tuning fault
OU1	Over voltage during acceleration	RAY	Contactor fault
OU2	Over voltage during deceleration	EEP	EEPROM read-write fault
OU3	Over voltage during constant speed	GND	Short circuit to ground fault
POF	Control power fault	END1	Accumulative running time reached fault
LU	Under voltage fault	END2	Accumulative power on time reached fault
OL2	AC drive over load	LOAD	Load becoming 0 fault
OL1	Motor over load	PIDE	PID feedback lost during running fault
LI	Input phase loss	CBC	Rapid current limit fault
LO	Output phase loss	ESP	Speed deviation too large fault
OH	Module over heat	OSP	Motor over speed fault
EF	External equipment fault		
CE	Communication fault		

Appendix 1 Troubleshooting

1 Fault alarm and countermeasures

The drive has a number of warning messages and protection functions. Once the fault occurs, the protection function operates, the drive stops outputting, the drive fault relay contacts act, and the

fault code is displayed on the drive display panel. Before seeking service, users can perform self-checking according to the tips in this section, analyze the cause of the fault, and find a solution. If it is the reason listed in the dotted box, please seek service, contact the agent of the drive you purchased or contact us directly.

The OUOC in the warning message is a hardware overcurrent or over voltage signal. In most cases, the hardware overvoltage fault causes the OUOC alarm.

Fault name	Display	Possible causes	Solutions
Servo drive unit protection	OC	1: The output circuit is grounded or short circuited. 2: The connecting cable of the motor is too long. 3: The module overheats. 4: The internal connections become loose. 5: The main control board is faulty. 6: The drive board is faulty. 7: The servo drive module is faulty	1: Eliminate external faults. 2: Install a reactor or an output filter. 3: Check the air filter and the cooling fan. 4: Connect all cables properly. 5, 6, 7: Looking for technical support
Overcurrent during acceleration	OC1	1: The output circuit is grounded or short circuited. 2: Motor auto-tuning is not performed. 3: The acceleration time is too Short. 4: Manual torque boost or V/F curve is not appropriate 5: The voltage is too low. 6: The startup operation is performed on the rotating motor. 7: A sudden load is added during acceleration. 8: The AC drive	1: Eliminate external faults. 2: Perform the motor auto-tuning. 3: Increase the acceleration time. 4: Adjust the manual torque boost or V/F curve. 5: Adjust the voltage to normal range 6: Select rotational speed tracking restart or start the motor after it stops. 7: Remove the added load. 8: Select an AC drive of higher power class

		model is of too small power class.	
Overcurrent during acceleration	OC2	1: The output circuit is grounded or short circuited. 2: Motor auto-tuning is not performed. 3: The deceleration time is too short. 4: The voltage is too low. 5: A sudden load is added during deceleration. 6: The braking unit and braking resistor are not installed.	1: Eliminate external faults. 2: Perform the motor auto-tuning. 3: Increase the deceleration time. 4: Adjust the voltage to normal range. 5: Remove the added load. 6: Install the braking unit and braking resistor.
Overcurrent at constant speed	OC3	1: The output circuit is grounded or short circuited. 2: Motor auto-tuning is not performed. 3: The voltage is too low. 4: A sudden load is added during operation. 5: The AC drive model is of too small power class.	1: Eliminate external faults. 2: Perform the motor auto- tuning. 3: Adjust the voltage to normal range. 4: Remove the added load. 5: Select an AC drive of higher power class.
Overvoltage during acceleration	OU1	1: The input voltage is too high. 2: An external force drives the motor during acceleration. 3: The acceleration time is too short. 4: The braking unit and braking resistor are not installed.	1: Adjust the voltage to normal range. 2: Cancel the external force or install a braking resistor. 3: Increase the acceleration time. 4: Install the braking unit and braking resistor.
Overvoltage during deceleration	OU2	1: The input voltage is too high. 2: An external force drives the motor	1: Adjust the voltage to normal range. 2: Cancel the external force or install the

		during deceleration. 3: The deceleration time is too Short. 4: The braking unit and braking resistor are not installed.	braking resistor. 3: Install the braking unit and braking resistor.
Overvoltage at Constant speed	OU3	1: The input voltage is too high. 2: An external force drives the motor during deceleration.	1: Adjust the voltage to normal range. 2: Cancel the external force or install the braking resistor.
Control power supply fault	POF	1: The input voltage is too high. 2: An external forced rives the motor during deceleration.	1: Adjust the voltage to normal range. 2: Cancel the external force or install the braking resistor.
Undervoltage	LU	1: Instantaneous power failure occurs on the input power supply. 2: The AC drive's input voltage is not within the allowable range. 3: The bus voltage is abnormal. 4: The rectifier bridge and buffer resistor are faulty. 5: The drive board is faulty. 6: The main control board is faulty.	1: Reset the fault. 2: Adjust the voltage to normal range. 3, 4, 5, 6: Looking for technical support
AC drives overload	OL2	1: The load is too heavy locked-rotor occurs on the motor. 2: The AC drive model is of too small power class.	1: Reduce the load and check the motor and mechanical condition. 2: Select an AC drive of higher power class
Motor overload	OL1	1: P9.01 is set improperly. 2: The load is too heavy or locked-rotor occurs on the	1: Set P9.01 correctly. 2: Reduce the load and check the motor and the mechanical

		motor. 3: The AC drive model is of too small power class.	condition. 3: Select an AC drive of higher power class.
Power input phase loss	LI	1: The three-phase power input is abnormal. 2: The drive board is faulty. 3: The lightening board is faulty. 4: The main control board is faulty.	1: Eliminate external faults. 2, 3, 4: Looking for technical support
Power output phase loss	LO	1: The cable connecting the AC drive and the motor is faulty. 2: The AC drive's three-phase outputs are unbalanced when the motor is running. 3: The drive board is faulty. 4: The module is faulty.	1: Eliminate external faults. 2: Check whether the motor three-phase winding is normal. 3: Looking for technical support.
Module overheat	OH	1: The ambient temperature is too temperature. 2: The air filter is blocked. 3: The fan is damaged. 4: The thermally sensitive resistor of the module is damaged. 5: The servo drive module is damaged.	1: Lower the ambient high. 2: Clean the air filter. 3: Replace the damaged fan 4: Replace the damaged thermally sensitive resistor. 5: Replace the servo drive module.
External equipment fault	EF	1: External fault signal is input via X. 2: External fault signal is input via virtual l/O.	Reset the operation
Communication fault	CE	1: The host computer	1: Check the cabling

		is in abnormal state. 2: The communication cable is faulty. 3: P028 is set improperly. 4: The communication parameters in group PD are set improperly.	of host computer. 2: Check the communication cabling. 3: Set P028 correctly. 4: Set the communication parameters properly.
Contactor fault	RAY	1: The drive board and power supply are faulty. 2: The contactor is faulty.	1: Replace the faulty drive board or power supply board. 2: Replace the faulty contactor.
Current detection fault	IE	1: The HALL device is faulty. 2: The drive board is faulty.	1: Replace the faulty HALL device. 2: Replace the faulty drive board.
Motor auto-tuning fault	TE	1: The motor parameters are not set according to the nameplate. 2: The motor auto-tuning times out.	1: Set the motor parameters according to the nameplate properly. 2: Check the cable connecting the AC drive and the motor.
Encoder fault	PG	1: The encoder type is incorrect. 2: The cable connection of the encoder is incorrect. 3: The encoder is damaged. 4: The PG card is faulty.	1: Set the encoder type correctly based on the actual situation. 2: Eliminate external faults. 3: Replace the damaged encoder. 4: Replace the faulty PG card.
EEPROM read-write fault	EEP	The EEPROM chip is damaged.	Replace the main control board.
AC drive hardware fault	OUOC	1: Overvoltage exists. 2: Overcurrent exists.	1: Handle based on overvoltage. 2: Handle based on overcurrent.
Short circuit to	GND	The motor is short	Replace the cable or

ground		circuited to the ground.	motor.
Accumulative running time reached	END1	The accumulative running time reaches the setting value.	Clear the record through the parameter initialization function.
Accumulative power-on time reached.	END2	The accumulative power-on time reaches the setting value.	Clear the record through the parameter initialization function.
Load becoming 0	LOAD	The AC drives running current is lower than P9.64.	Check that the load is disconnected or the setting of P9.64 and P9.65 is correct.
PID feedback lost during running	PIDE	The PID feedback is lower than the setting of PA.26	Check the PlD feedback signal or set PA.26 to a proper value.
Pulse-by-pulse current limit fault	CBC	1: The load is too heavy or locked-rotor occurs on the motor. 2: The AC drive model is of too small power class.	1: Reduce the load and check the motor and mechanical condition. 2: Select an AC drive of higher power class.
Too large speed deviation	ESP	1: The encoder parameters are set Incorrectly. 2: The motor auto-tuning is not Performed. 3: P9.69 and P9.70 are set incorrectly.	1: Set the encoder parameters properly. 2: Perform the motor auto- tuning. 3: Set P9.69 and P9.70 correctly based on the actual situation.
Motor over-speed	OSP	1: The encoder parameters are set Incorrectly. 2: The motor auto-tuning is not Performed. 3: P9.69 and P9.70 are set incorrectly.	1: Set the encoder parameters properly. 2: Perform the motor auto- tuning. 3: Set P9.69 and P9.70 correctly based on the actual situation.
Initial position fault	INI	The motor parameters are not set based on the actual situation.	Check that the motor parameters are set correctly and whether the setting of rated current is too small.

2 Common faults and solutions

You may come across the following faults during the use of the AC drive. Refer to the following table for simple fault analysis. Table 6-1 Troubleshooting to common faults of the AC drive.

SN	Fault	Possible causes	Solutions
1	There is no display at power-on	1: There is no power supply to the AC drive or the power input to the AC drive is too low. 2: The power supply of the switch on the drive board of the AC drive is faulty. 3: The rectifier bridge is damaged. 4: The control board or the operation panel is faulty. 5: The cable connecting the control board and the drive board and the operation panel breaks	1: Check the power supply. 2: Check the bus voltage. 3: Looking for technical support.
2	“ 9000” is displayed at power-on.	1: The cable between the drive board and the control board is in poor contact. 2: Related components on the control board are damaged. 3: The motor or the motor cable is short circuited to the ground. 4: The HALL device is faulty 5: The power input to the AC drive is too low.	Looking for technical support
3	“GND" is displayed at power-on.	1: The motor or the motor output cable is short-circuited to the ground. 2: The AC drive is damaged.	1: Measure the insulation of the motor and the output cable with a megger. 2: Looking for technical support
4	The AC drive display is normal upon power-on. But “9000" is displayed after running and stops immediately.	1:The cooling fan is damaged or locked-rotor occurs. 2: The external control terminal cable is short circuited	1: Replace the damaged fan. 2: Eliminate external fault.
5	OH (module overheat) fault is reported frequently.	1: The setting of carrier frequency is too high. 2: The cooling fan is damaged, or the air filter is blocked. 3: Components inside the AC drive are damaged (thermal coupler or others).	1: Reduce the carrier frequency (P017). 2: Replace the fan and clean the air filter. 3: Looking for technical support

6	The motor does not rotate after the AC drive runs.	1: Check the motor and the motor Cables. 2: The AC drive parameters are set improperly (motor parameters). 3: The cable between the drive board and the control board is in poor contact. 4: The drive board is faulty.	1: Ensure the cable between the AC drive and the motor is normal. 2: Replace the motor or clear mechanical faults. 3: Check and re-set motor parameters.
7	The S terminals are disabled.	1: The parameters are set incorrectly. 2: The external signal is incorrect 3: The jumper bar across OP and +24 V becomes loose. 4: The control board is faulty.	1: Check and reset the parameters in group P5. 2: Re-connect the external signal cables. 3: Re-confirm the jumper bar across OP and +24 V. 4:Looking for technical support
8	The motor speed is always low CLVC mode.	1: The encoder is faulty. 2: The encoder cable is connected incorrectly or in poor contact. 3: The PG card is faulty. 4: The drive board is faulty.	1: Replace the encoder and ensure the cabling is proper. 2: Replace the PG card. 3: Looking for technical support
9	The AC drive reports overcurrent and overvoltage frequently.	1: The motor parameters are set improperly. 2: The acceleration/deceleration time is improper. 3: The load fluctuates.	1: Re-set motor parameters or re-perform the motor auto-tuning. 2: Set proper acceleration/deceleration time. 3: Looking for technical support
10	rAy is reported upon power-on or running.	The soft startup contactor is not picked up.	1: Check whether the contactor cable is loose. 2: Check whether the contactor is faulty. 3: Check whether 24V power supply of the contactor is faulty. 4: Looking for technical support

Appendix 2 Communication protocol

PD4000 series inverter provides RS232 /RS485 communication interface, and support the Modbus communication protocol. Users can be achieved by computing machine or PLC central control through the communication protocol set inverter running commands，modify or read function code parameters, read the inverter working condition and fault information, etc.

1：The agreement content

The serial communication protocol defines the serial communication transmission of information content and format. Including: host polling or wide planting format; Host encoding method, the content includes: the function of the required action code, data transmission and error checking, etc. From the ring of machine should be used is the same structure, content including: action confirmation, return the data and error checking, etc. If there was an error in receiving information from a machine, or cannot achieve the requirements of the host, it will organize a fault feedback information in response to the host.

2：Application methods

Application mode inverter with RS232 /RS485 bus access to the "from" single main PC/PLC control network.

3：Bus structure

(1) The interface way RS232/RS485 interface hardware

(2) Asynchronous serial transmission mode, half-duplex transmission mode. At the same time the host and the only one to send data from the machine and the other can only receive data. Data in the process of serial asynchronous communication, the form of a message, a frame of a frame to send

(3) Topological structure from single host machine system. From the machine address set in the range of 1~ 247, 0 for broad cast communication address. In the network from the machine address must be unique.

4：Protocol description

PD4000 series inverter is a kind of asynchronous serial port communication protocol of master-slave Modbus communication protocol, the network has only one equipment (host) to establish agreement (called "query/command"). Other equipment (machine)can only by providing data response of the main machine "query/command" ,or "query/command" according to the host to make the corresponding action. Host in this refers to the personal computer (PC), industrial control equipment or programmable logic controller (PLC), etc., from machine refers to PD4000 inverter. The host can communicate to a separate from the machine, also can to all under a broadcast information from machine release. For access to the host alone "query/command", from the machine to return to a information (called response), for radio host information, from the machine without feedback response to the host.

5：Communications data structure

Communication data structure PD4000 series inverter of the Modbus protocol communication data format is as follows: using the RTU mode, messages are sent at least begin with 3.5 characters pause

time interval.

In network wave rate under varied characters of the time, this is the most easy to implement (below T1, T2, T3, T4). Transmission equipment is the first domain address.

The transmission character of you can use is the hex 0...9.A...F. Continuously detect network bus network facilities, including pause interval of time. When the first domain (domain) to receive, every equipment decoding to determine whether to own. After the last transmission character, a pause at least 3.5 characters time calibration for the end of the message. A new message can be started after the pause.

The entire message frame must be as a continuous flow of transmission. If the time frame to complete more than 1.5 characters before pause time, receiving equipment will refresh incomplete message and assume that the next byte is a new message the address of the domain. Likewise, if a new message in less than 3.5 characters of time and then a message before, receiving equipment will think it is a continuation of the previous message. This will result in an error, because in the final CRC field value can't be right. RTU frame format:

The frame header START	3.5 characters
Slave address ADR	Communication address：1-247
Command code CMD	03：Read the machine parameters 06：Write the machine parameters
Data content DATA(N-1)	Information content: Function code parameter address, function code number of parameters function code parameter values, etc
Data content DATA(N-2)	
……	
Data content DATA0	
High-order position of CRC CHK	Estimated value：CRC value
Low-order position of CRC CHK	
END	3.5 characters' time

CMD (Command instruction) and DATA (the description of data word) command code:03H, read N word (Word) (Can read the most words of 12)

For example, from the machine address of 01 inverter startup F105 continuous read for two consecutive values.

The host command information

ADR	01H
CMD	03H
High-order position of the starting address	F1H
Low-order position of the starting address	05H
High-order position of register	00H
Low-order position of register	02H
Low-order position of CRC CHK	Wait to calculate the CRC CHK values
High-order position of CRC CHK	

In response to information from the slave machine

Set PD.05 to 0:

ADR	01H
CMD	03H

High-order position of bytes	00H
Low-order position of bytes	04H
Data high-order position of F002H	00H
Data low-order position of F002H	00H
Data high-order position of F003H	00H
Data low-order position of F003H	01H
Low-order position of CRC CHK	Wait to calculate the CRC CHK values
High-order position of CRC CHK	

Set PD.05 to 1：

ADR	01H
CMD	03H
The number of bytes	04H
Data high-order position of F002H	00H
Data low-order position of F002H	00H
Data high-order position of F003H	00H
Data low-order position of F003H	01H
Low-order position of CRC CHK	Wait to calculate the CRC CHK values
High-order position of CRC CHK	

The command code: 06H write a word (Word)

For example, write000 (BB8H) to slave machine. Address 05Hinverter's F00AH address.

The host command information

ADR	05H
CMD	06H
High-order position of data address	F0H
Low-order position of data address	0AH
High-order position of information content	0BH
Low-order position of information content	B8H
Low-order position of CRC CHK	Wait to calculate the CRC CHK values
High-order position of CRC CHK	

In response to information from the slave machine

ADR	02H
CMD	06H
High-order position of data address	F0H
Low-order position of data address	0AH
High-order position of information content	13H
Low-order position of information content	88H
Low-order position of CRC CHK	Wait to calculate the CRC CHK values
High-order position of CRC CHK	

CRC Check way: CRC (Cyclical Redundancy Check) Check way-use RTU frame format, the message includes error detection field based on the method of CRC. CRC domain test the whole content of a message. CRC domain is two bytes, contains a 16-bit binaryvalues.it is calculated by the transmission equipment, added to the message. receive messages the device recalculate. And compared with receives the CRC in the domain of value, if the two CRC value is not equal, then

there is an error in transmission.
CRC is saved in 0xFFFF, then call a process to continuous 8-bit bytes of the message and the values in the current register for processing. Only 8 bit data in each character of CRC is effective, Starting bit and stopping bit and parity bits are invalid.
In the process of CRC, each of the eight characters are separate and dissimilar or register contents (XOR), The results move to the least significant bit direction, set the most significant bit to 0. LSB is extracted to test, if set LSB to 1, Register and preset value dissimilarity or alone, if set LSB to 0, is not to. The whole process will repeat 8 times. when the last time (the eighth time) is completed, next 8-bitbytes and separate and register under the current value of the alien or. The values in the final register, Is all bytes in the message is executed after the CRC value.
When CRC added to the messages. The low byte to join first and then high byte. CRC Simple function is as follows:

```
unsigned int crc_cal_value(unsigned char *data_value, unsigned char data_length)
{
Int i;
Unsigned int crc_value=0xffff;
While(data_length--)
{
Crc_value^=*data_value++;
For(i=0; i<8; i++)
{
If (crc_value&0x0001)
Crc_value=(crc_value>>1)^0xa001;
   Else
Crc_value=crc_value>>1;
}
}
Return(crc_value);
}
```

Address definition of communication parameters
This part is the content of the communication, used to control the operation of the inverter, inverter status and related parameters setting. Read and write functional code parameter (some function code which cannot be changed, only for the use of manufacturers or monitoring): function code parameter address label rules: By function block number and the label for the parameter address representation rules. High byte:F0~FF(P group),A0~AF(C group),70~7F(D group)low byte:00-FF
Such as: P3.12, The address is expressed as F30C; attention: PF group: Neither read the parameters, and do not change parameters; Group D group: only can read, do not change the parameters.
When some parameters in inverter is in operation, do not change, Some parameters of the inverter in any state, cannot be changed; Change function code parameters, but also pay attention to the range of parameters, units, and related instructions.
In addition, because the EEPROM is stored frequently, the service life of the block can reduce the life of the block EPROM, so some function code under the mode of communication, do not need to be stored, just change the value of RAM. If it is P group of parameters, in order to realize the function,

as long as putting this function code address high F into 0 can be achieved. If it is C group of parameters, in order to realize the function, as long as putting the function code the address of high A into 4 can be achieved Corresponding function codes are shown as the following address: the high byte:00~0F (P group),40~4F (group B) low byte: 00 to FF.

Such as:

Function code P3.12 is not stored in the EEPROM, the address is expressed as 030C; Function code C0-05 is not stored in the EEPROM, the address is expressed as 4005; The address representation can only do writing RAM, can't do reading action, when reading, it is invalid address. For all the parameters, can also use the command code 7H to implement this function. Stopping /starting parameters:

Stopping/starting parameters：

Parameter address	Parameter description
1000	Communication Setting value (-10000~10000) (decimal System)
1001	Operating frequency
1002	Bus voltage
1003	Output voltage
1004	Current output
1005	Output power
1006	Output torque
1007	Running velocity
1008	S input flag
1009	M01 output flag
100A	FIV voltage
100B	FIC voltage
100C	Reserved
100D	Count value input
100E	The length of the input
100F	The load speed
1010	PID setting
1011	PID feedback
1012	PLC steps
1013	PULSE the input pulse frequency, unit 0.01kHz
1014	Reserved
1015	The remaining running time
1016	FIV before correction voltage
1017	FIC before correction voltage
1018	Reserved
1019	Linear velocity
101A	The current access to electricity time
101B	The current running time
101C	PULSE input pulse frequency，unit 1Hz
101D	Communication setting value

101E	Reserved
101F	The main frequency X show
1020	The main frequency Y show

Attention：

Communication setting value is relative percentage, 10000 corresponds to 100.00% and -10000-100.00%. The frequency of dimensional data, the percentage is relative to the percentage of maximum frequency (P0.12); Counter rotating torque dimensional data, the percentage is P2.10.

Control command input to the inverter:(write-only)

The command word address	Command function
2000	0001：Running forward
	0002：Reserve running
	0003：Normal inching turning
	0004：Reversal point move
	0005：Free downtime
	0006：Slowing down
	0007：Failure reset

Read the inverter state: (read-only)

Status word address	Status word function
3000	0001：Running forward
	0002：Reserve running
	0003：Closing down

Parameters lock password check: (if return for 8888H, it indicates that the password check through)

Password address	The content of the input password
1F00	*****

Command address	Command content
2001	BIT0：（reserved） BIT1：（reserved） BIT2：RA-RB-RC output control BIT3：TA-TC output control BIT4：M01 output control

Analog output FOV control: (write-only)

Command address	Command content
2002	0~7FFF represent 0%-100%

Analog output FOC control:（Reserved）

Command address	Command content
2003	0~7FFF represent 0%-100%

PULSE(PULSE) output control: (write -only)

Command address	Command content
2004	0~7FFF represent 0%-100%

Inverter fault description:

Inverter fault address	Inverter fault information
8000	0000: Failure-free 0001: reserve 0002: Accelerate over current 0003: Slow down over current 0004: Constant speed over current 0005: Accelerate over the voltage 0006: Slow down over voltage 0007: Constant speed over voltage 0008: Buffer resistance overload fault 0009: Under-voltage fault 000A: The inverter over load 000B: Motor overload 000C: Reserved 000D: The output phase 000E: Module is overheating 000F: External fault 0010: Abnormal communication 0011: Abnormal contactor 0012: Current detection fault 0013: Motor tuning fault 0014: Reserved 0015: Abnormal parameters, reading and writing 0016: Inverter hardware failure 0017: Motor for short circuit fault 0018: Reserved 0019: Reserved 001A: Running time reached 001B: Reserved 001C: Reserved 001D: Accumulative power-on time reached 001E: Load becoming 0 001F: PID feedback lost during running 0028: With-wave current limit fault 0029: Motor switchover fault during running 002A: Too large speed deviation 002B: Motor over-speed 002D: Motor over heat 005A: Encoder line number setting error 005B: Don't connect the encoder 005C: Initial position fault 005E: Speed feedback error

Communication failures address	Fault feature description
8001	0000: Failure-free 0001: Password mistake 0002: The command code error 0003: CRC Checking error 0004: Invalid address 0005: Invalid parameter 0006: Correcting parameter is invalid 0007: System is locked 0008: Block is EEPROM operation

PD group Communication parameters show

PD.00	Baud rate	The factory value	6005
	Setting range	units' digit: MODUBS Baud rate 0:300BPS 1:600BPS 2:1200BPS 3:2400BPS 4:4800BPS 5:9600BPS 6:19200BPS 7:38400BPS 8:57600BPS 9:115200BPS	

This parameter is used to set data transfer rate between the PC and inverter. Notice that setting the baud rate of upper machine and inverter must agree, otherwise, the communication can't carry on. The faster the baud rate, the greater the communication.

PD.01	The data format	The factory value	0
	Setting range	0: No check: The data format<8,N,2> 1: Even-parity: The data format<8,E,1> 2: Odd parity check: The data format<8,O,1> 3: No check: The data format<8-N-1>	

PC and data format set by the inverter must agree, otherwise, the communication can't carry on.

PD.02	The machine address	The factory value	1
	Setting range	1~247，0 is the broadcast address	

When the machine address set to 0, namely for the broadcast address, realize PC broadcasting functions. The machine address has uniqueness (except the broadcast address), which is to achieve the basis of upper machine and inverter peer-to-peer communications.

PD.03	Response latency	The factory value	2ms
	Setting range	0-20ms	

Response latency: refers to the inverter data to accept the end up to a upper machine to send data in the middle of the interval of time. If the response time delay is less than the system processing time, the response time delay will be subject to system processing time, processing time, such as response

time delay is longer than system after processing the data, the system will delay waiting, until the response delay time to up to a upper machine to send data.

PD.04	Communication timeout	The factory value	0
	Setting range	0.0s(invalid) 0.1-60.0S	

When the function code is set to 0.0s, communication timeout parameter is invalid. When the function code set to valid values, if a communication and the interval time of the next communication beyond the communication timeout, system will be submitted to the communication failure error (CE). Usually, it is set into is invalid. If, in the continuous communication system parameter set the time, you can monitor the communication status.

PD.05	Communication	The factory value	1
	Setting range	0：No standard modbus protocol 1：The standard modbus protocol	

PD.05=1: choose the standard Modbus protocol

PD.05=0: when reading command, returns number of bytes from the machine is a byte more than the standard Modbus protocol detailed in this agreement

5 Communication data structures.

PD.06	Read the current resolution	The factory value	0
	Setting range	0：0.01A 1：0.1A	

Used to determine the communication while reading the output current, current value of the output units.